Today's Outline - April 02, 2015

Today's Outline - April 02, 2015

- PHYS 570 days at 10-ID

Today's Outline - April 02, 2015

- PHYS 570 days at 10-ID
- Characteristics of the Darwin Curve

Today's Outline - April 02, 2015

- PHYS 570 days at 10-ID
- Characteristics of the Darwin Curve
- Asymmetric Reflections

Today's Outline - April 02, 2015

- PHYS 570 days at 10-ID
- Characteristics of the Darwin Curve
- Asymmetric Reflections
- Dumond Diagrams

Today's Outline - April 02, 2015

- PHYS 570 days at 10-ID
- Characteristics of the Darwin Curve
- Asymmetric Reflections
- Dumond Diagrams
- Monochromators

Today's Outline - April 02, 2015

- PHYS 570 days at 10-ID
- Characteristics of the Darwin Curve
- Asymmetric Reflections
- Dumond Diagrams
- Monochromators
- Photoelectric Absorption

Today's Outline - April 02, 2015

- PHYS 570 days at 10-ID
- Characteristics of the Darwin Curve
- Asymmetric Reflections
- Dumond Diagrams
- Monochromators
- Photoelectric Absorption
- Cross-Section of an Isolated Atom

Today's Outline - April 02, 2015

- PHYS 570 days at 10-ID
- Characteristics of the Darwin Curve
- Asymmetric Reflections
- Dumond Diagrams
- Monochromators
- Photoelectric Absorption
- Cross-Section of an Isolated Atom

Homework Assignment #06:
Chapter 6: 1,6,7,8,9
due Tuesday, April 14, 2015

PHYS 570 days at 10-ID

1. April 10, 2015, 09:00 – 16:00
2. April 24, 2015, 09:00 – 16:00

PHYS 570 days at 10-ID

1. April 10, 2015, 09:00 – 16:00
2. April 24, 2015, 09:00 – 16:00
3. Activities
   - Absolute flux measurement
   - Reflectivity measurement
   - EXAFS measurement
   - Rocking curve measurement (possibly)

PHYS 570 days at 10-ID

1. April 10, 2015, 09:00 – 16:00
2. April 24, 2015, 09:00 – 16:00
3. Activities
   - Absolute flux measurement
   - Reflectivity measurement
   - EXAFS measurement
   - Rocking curve measurement (possibly)
4. Make sure your badge is ready

PHYS 570 days at 10-ID

1. April 10, 2015, 09:00 – 16:00
2. April 24, 2015, 09:00 – 16:00
3. Activities
   - Absolute flux measurement
   - Reflectivity measurement
   - EXAFS measurement
   - Rocking curve measurement (possibly)
4. Make sure your badge is ready
5. Leave plenty of time to get the badge

PHYS 570 days at 10-ID

1. April 10, 2015, 09:00 – 16:00
2. April 24, 2015, 09:00 – 16:00
3. Activities
   - Absolute flux measurement
   - Reflectivity measurement
   - EXAFS measurement
   - Rocking curve measurement (possibly)
4. Make sure your badge is ready
5. Leave plenty of time to get the badge
6. Let me know when you plan to come!

Darwin widths

	$\zeta_D^{FWHM} \times 10^6$								
	(111)			(220)			(400)		
Diamond	61.0			20.9			8.5		
a= 3.5670 Å	3.03	0.018	-0.01	1.96	0.018	-0.01	1.59	0.018	-0.01
Silicon	139.8			61.1			26.3		
a= 5.4309 Å	10.54	0.25	-0.33	8.72	0.25	-0.33	7.51	0.25	-0.33
Germanium	347.2			160.0			68.8		
a= 5.6578 Å	27.36	-1.1	-0.89	23.79	-1.1	-0.89	20.46	-1.1	-0.89

the quantities below the widths are $f^0(Q)$, f', and f'' (for $\lambda = 1.5405\,\text{Å}$). For an angular width, multiply times $\tan\theta$ and for π polarization, multiply by $\cos(2\theta)$.

Asymmetric Geometry

In general the diffracting planes are not precisely aligned with the surface of the crystal.

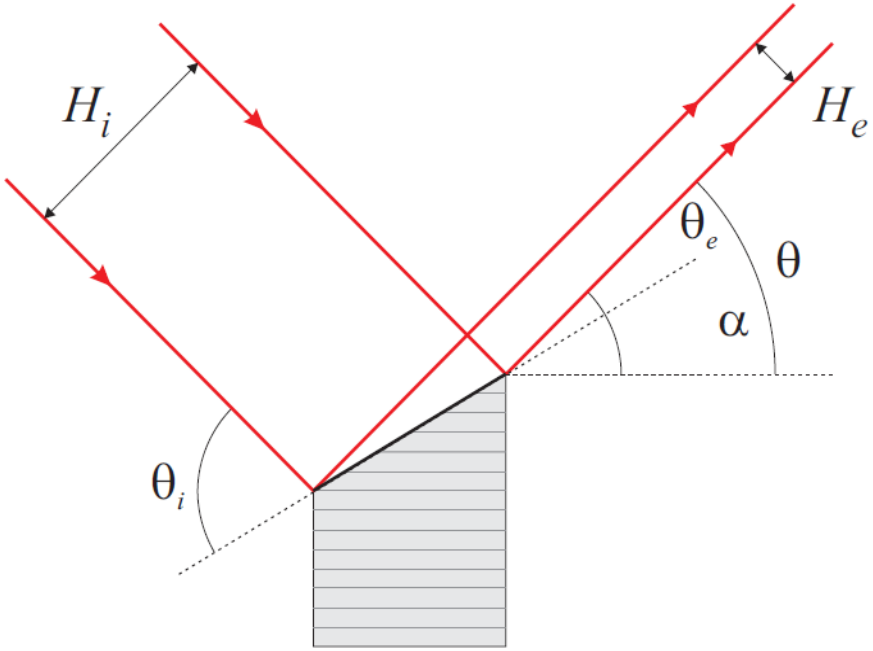

Asymmetric Geometry

In general the diffracting planes are not precisely aligned with the surface of the crystal.

Parameterized by the asymmetry angle $0 < \alpha < \theta_{Bragg}$

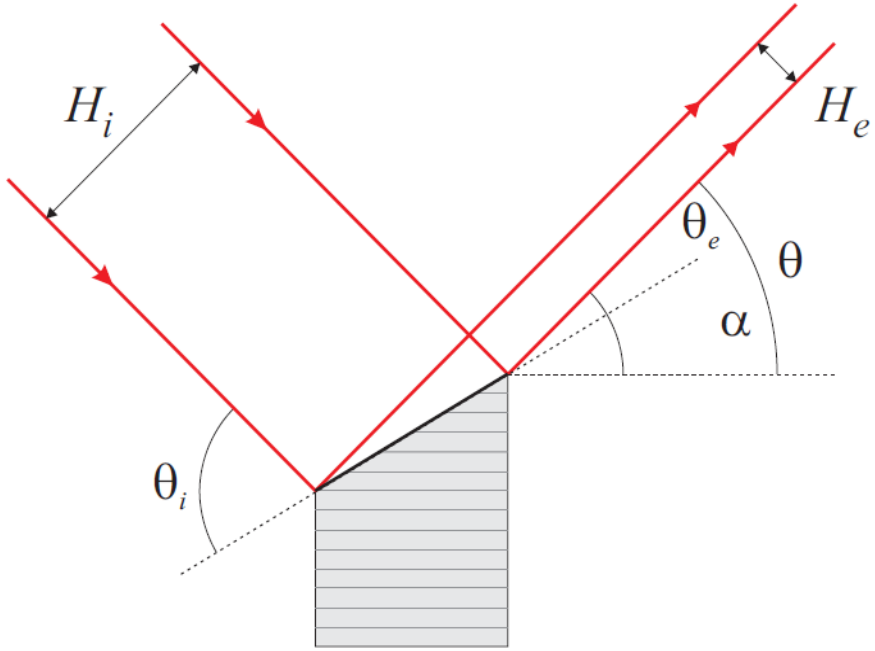

Asymmetric Geometry

In general the diffracting planes are not precisely aligned with the surface of the crystal.

Parameterized by the asymmetry angle $0 < \alpha < \theta_{Bragg}$

This leads to a beam compression

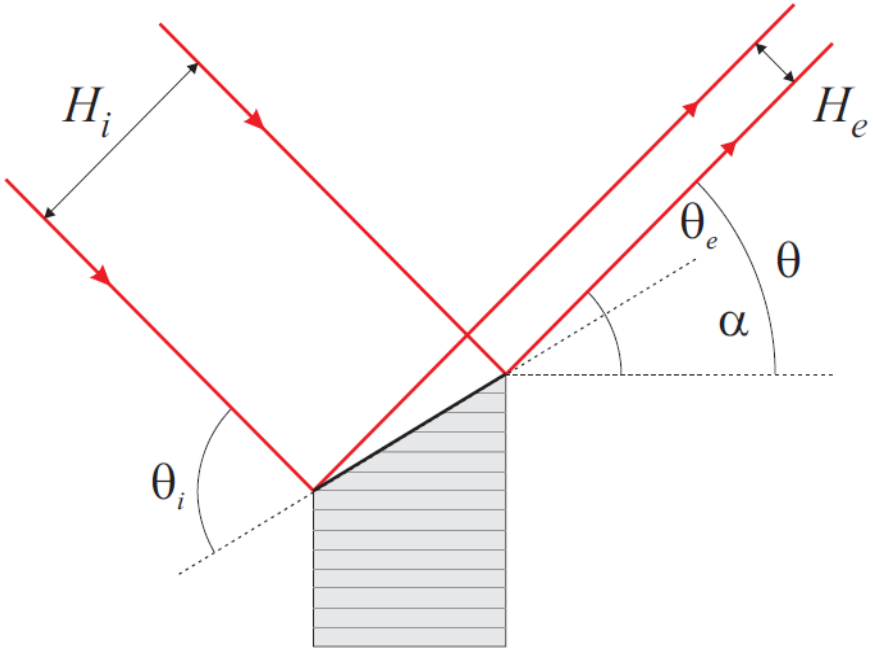

Asymmetric Geometry

In general the diffracting planes are not precisely aligned with the surface of the crystal.

Parameterized by the asymmetry angle $0 < \alpha < \theta_{Bragg}$

This leads to a beam compression

$$b = \frac{\sin\theta_i}{\sin\theta_e}$$

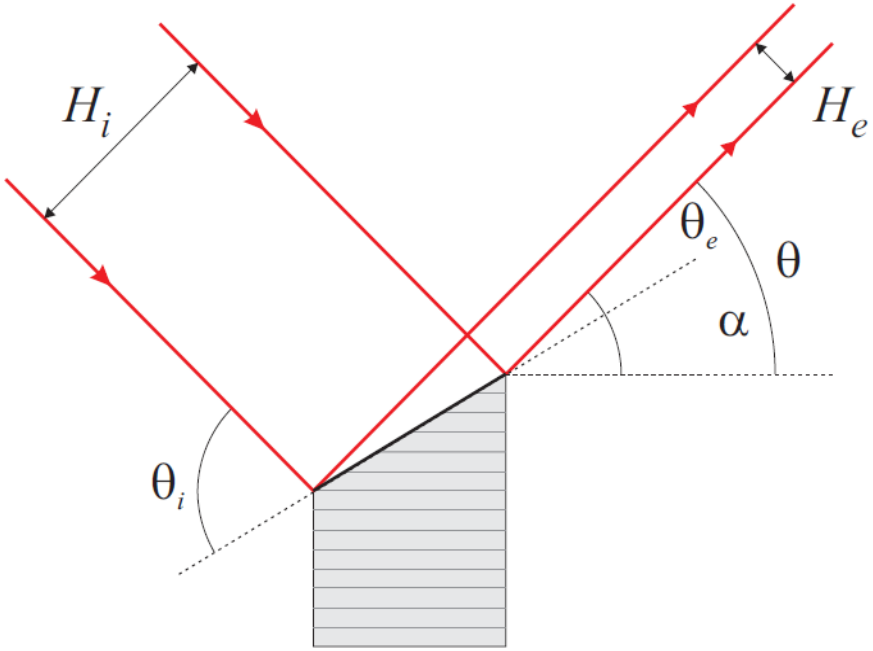

Asymmetric Geometry

In general the diffracting planes are not precisely aligned with the surface of the crystal.

Parameterized by the asymmetry angle $0 < \alpha < \theta_{Bragg}$

This leads to a beam compression

$$b = \frac{\sin\theta_i}{\sin\theta_e} = \frac{\sin(\theta+\alpha)}{\sin(\theta-\alpha)}$$

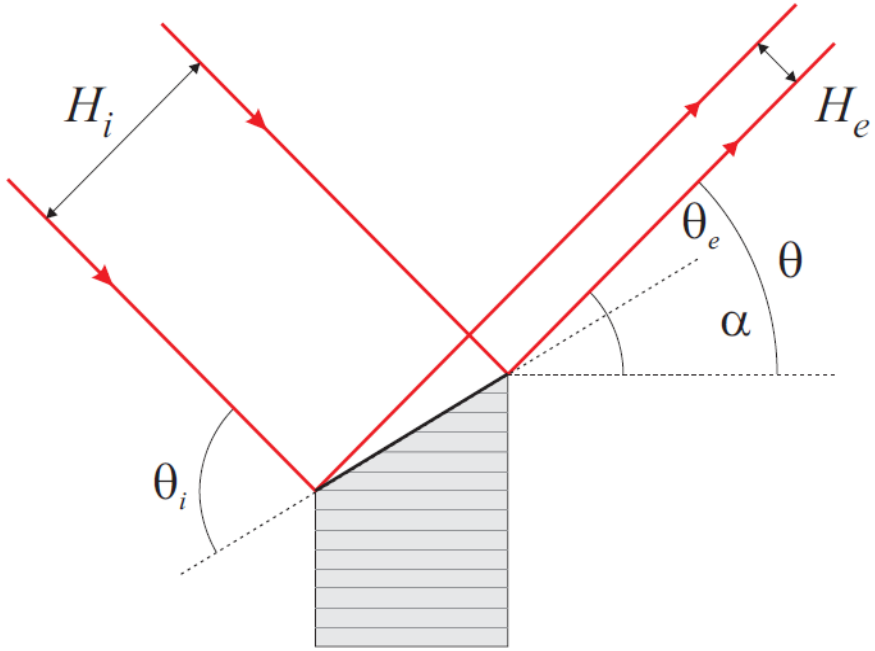

Asymmetric Geometry

In general the diffracting planes are not precisely aligned with the surface of the crystal.

Parameterized by the asymmetry angle $0 < \alpha < \theta_{Bragg}$

This leads to a beam compression

$$b = \frac{\sin\theta_i}{\sin\theta_e} = \frac{\sin(\theta+\alpha)}{\sin(\theta-\alpha)}$$

$$H_e = \frac{H_i}{b}$$

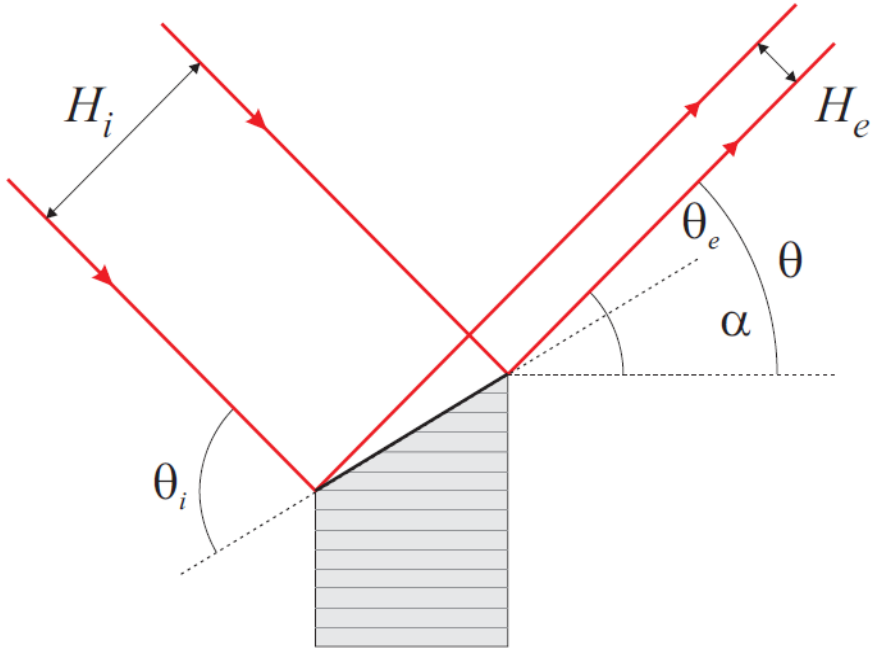

Asymmetric Geometry

In general the diffracting planes are not precisely aligned with the surface of the crystal.

Parameterized by the asymmetry angle $0 < \alpha < \theta_{Bragg}$

This leads to a beam compression

$$b = \frac{\sin\theta_i}{\sin\theta_e} = \frac{\sin(\theta+\alpha)}{\sin(\theta-\alpha)}$$

$$H_e = \frac{H_i}{b}$$

according to Liouville's theorem, the divergence of the beam must also change

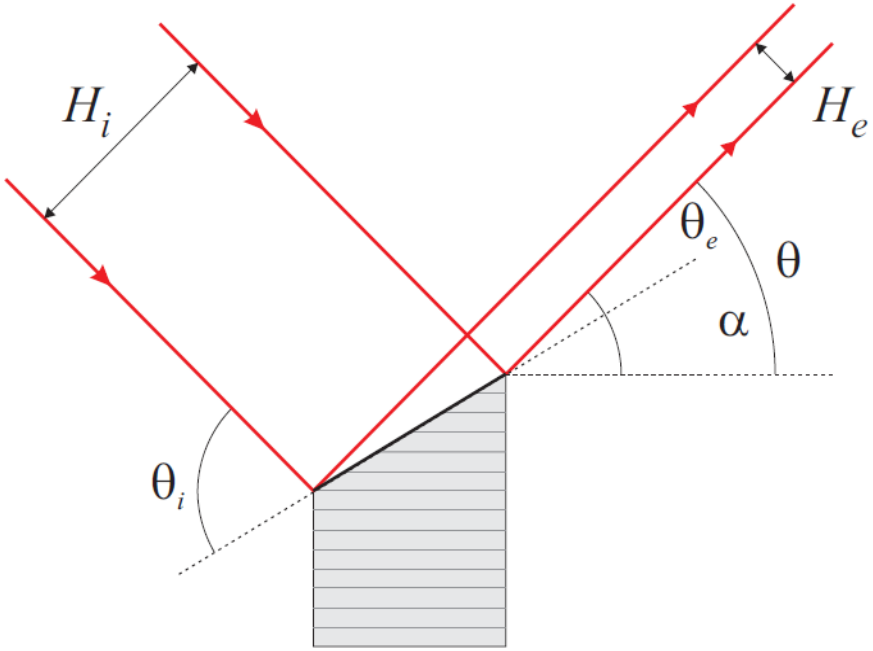

Asymmetric Geometry

In general the diffracting planes are not precisely aligned with the surface of the crystal.

Parameterized by the asymmetry angle $0 < \alpha < \theta_{Bragg}$

This leads to a beam compression

$$b = \frac{\sin\theta_i}{\sin\theta_e} = \frac{\sin(\theta+\alpha)}{\sin(\theta-\alpha)}$$

$$H_e = \frac{H_i}{b}$$

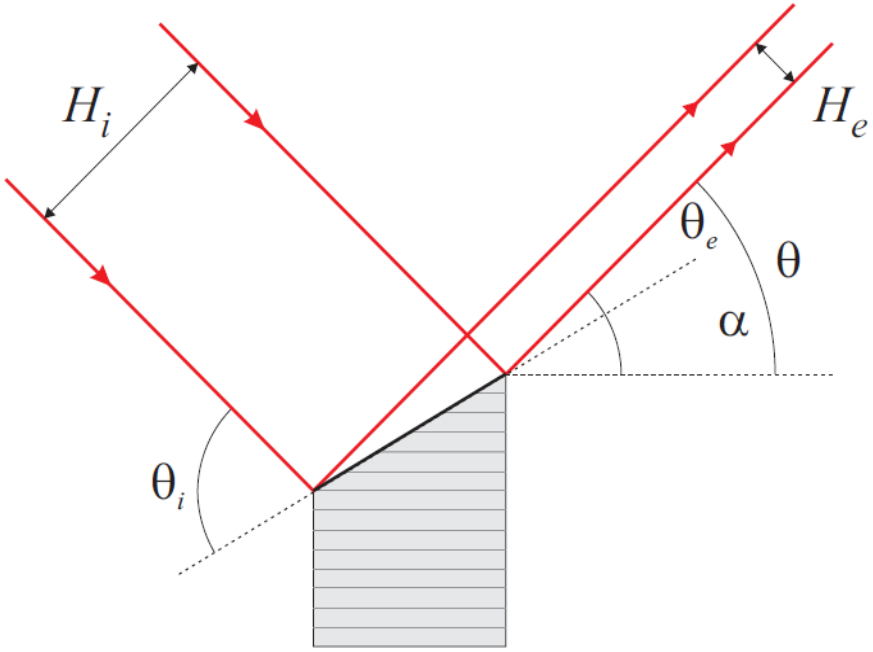

according to Liouville's theorem, the divergence of the beam must also change

$$\delta\theta_e = \sqrt{b}(\zeta_D \tan\theta)$$

Asymmetric Geometry

In general the diffracting planes are not precisely aligned with the surface of the crystal.

Parameterized by the asymmetry angle $0 < \alpha < \theta_{Bragg}$

This leads to a beam compression

$$b = \frac{\sin\theta_i}{\sin\theta_e} = \frac{\sin(\theta+\alpha)}{\sin(\theta-\alpha)}$$

$$H_e = \frac{H_i}{b}$$

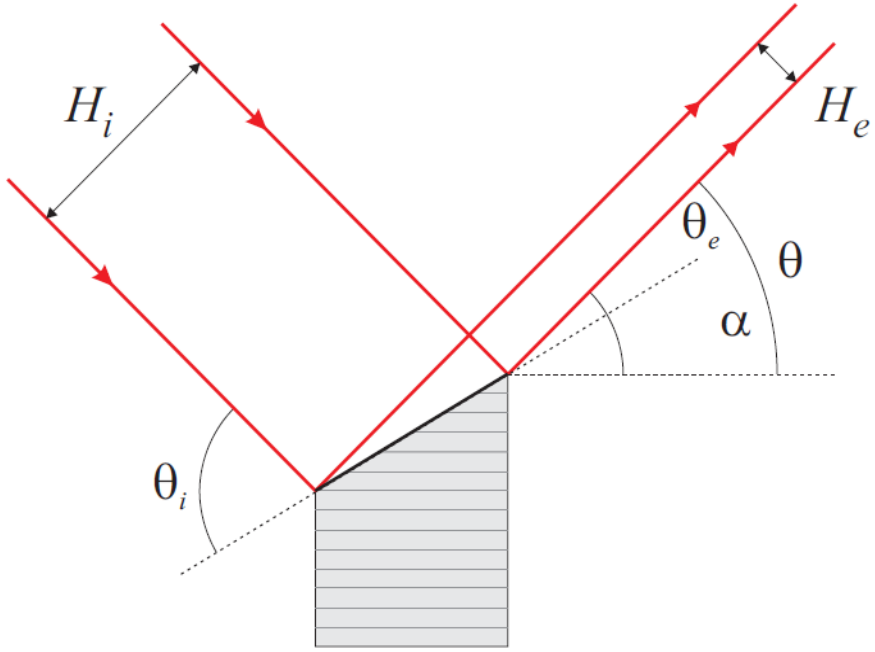

according to Liouville's theorem, the divergence of the beam must also change

$$\delta\theta_e = \sqrt{b}(\zeta_D \tan\theta)$$

$$\delta\theta_i = \frac{1}{\sqrt{b}}(\zeta_D \tan\theta)$$

Asymmetric Geometry

In general the diffracting planes are not precisely aligned with the surface of the crystal.

Parameterized by the asymmetry angle $0 < \alpha < \theta_{Bragg}$

This leads to a beam compression

$$b = \frac{\sin\theta_i}{\sin\theta_e} = \frac{\sin(\theta+\alpha)}{\sin(\theta-\alpha)}$$

$$H_e = \frac{H_i}{b}$$

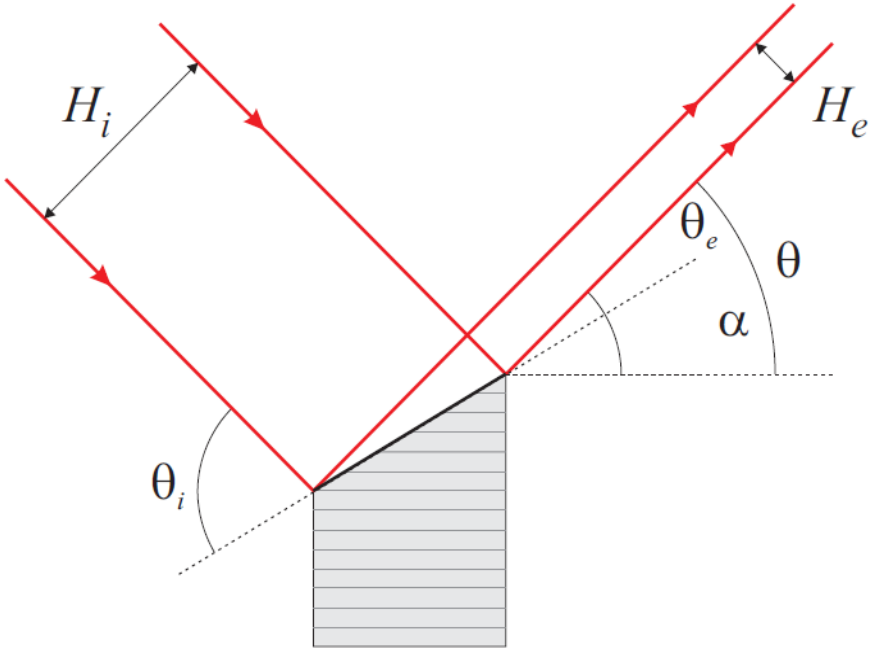

according to Liouville's theorem, the divergence of the beam must also change

$$\delta\theta_i H_i$$

$$\delta\theta_e = \sqrt{b}(\zeta_D \tan\theta)$$

$$\delta\theta_i = \frac{1}{\sqrt{b}}(\zeta_D \tan\theta)$$

Asymmetric Geometry

In general the diffracting planes are not precisely aligned with the surface of the crystal.

Parameterized by the asymmetry angle $0 < \alpha < \theta_{Bragg}$

This leads to a beam compression

$$b = \frac{\sin\theta_i}{\sin\theta_e} = \frac{\sin(\theta+\alpha)}{\sin(\theta-\alpha)}$$

$$H_e = \frac{H_i}{b}$$

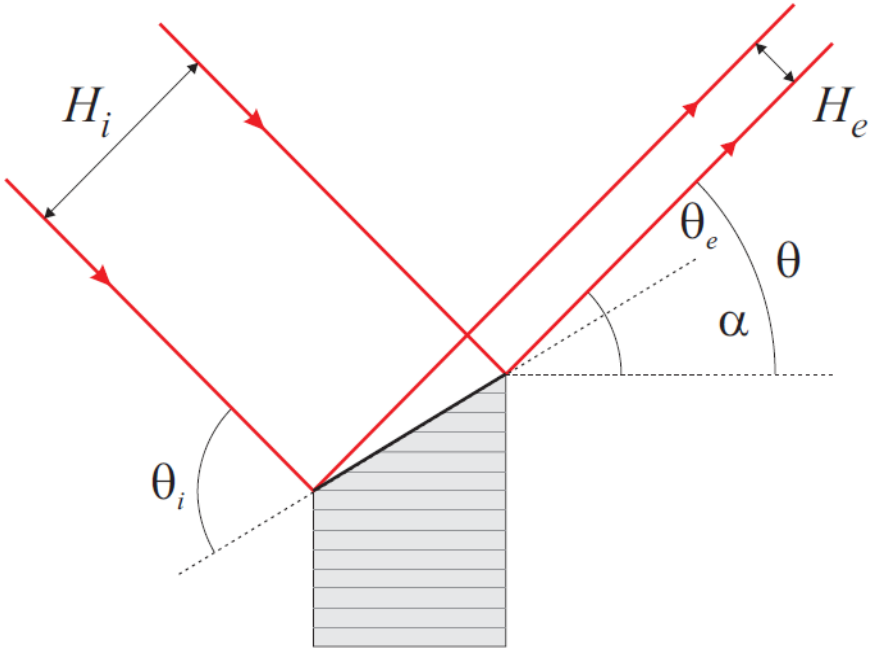

according to Liouville's theorem, the divergence of the beam must also change

$$\delta\theta_i H_i = \frac{1}{\sqrt{b}}(\zeta_D \tan\theta) b H_e$$

$$\delta\theta_e = \sqrt{b}(\zeta_D \tan\theta)$$

$$\delta\theta_i = \frac{1}{\sqrt{b}}(\zeta_D \tan\theta)$$

Asymmetric Geometry

In general the diffracting planes are not precisely aligned with the surface of the crystal.

Parameterized by the asymmetry angle $0 < \alpha < \theta_{Bragg}$

This leads to a beam compression

$$b = \frac{\sin\theta_i}{\sin\theta_e} = \frac{\sin(\theta+\alpha)}{\sin(\theta-\alpha)}$$

$$H_e = \frac{H_i}{b}$$

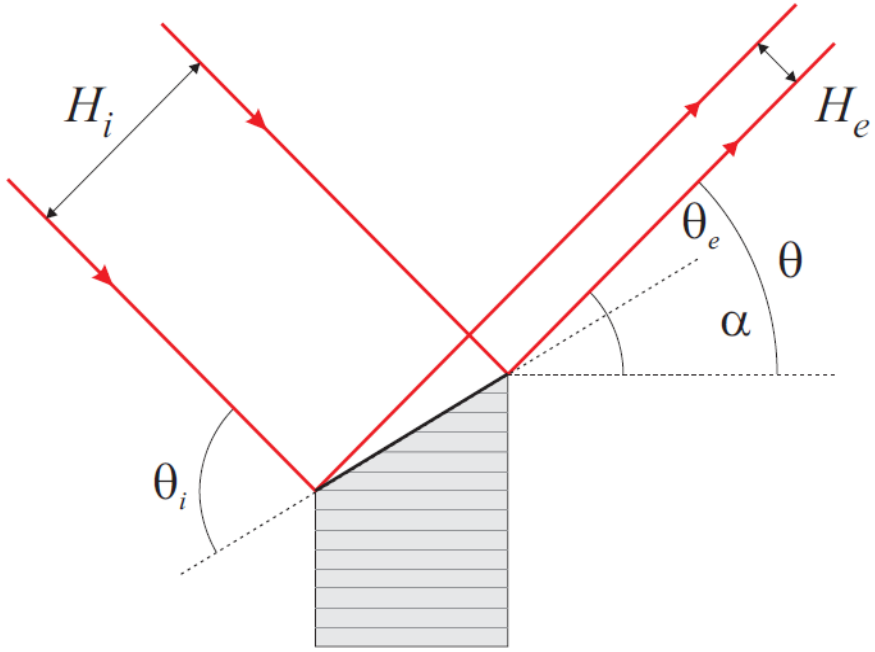

according to Liouville's theorem, the divergence of the beam must also change

$$\delta\theta_e = \sqrt{b}(\zeta_D \tan\theta)$$

$$\delta\theta_i = \frac{1}{\sqrt{b}}(\zeta_D \tan\theta)$$

$$\delta\theta_i H_i = \frac{1}{\sqrt{b}}(\zeta_D \tan\theta) b H_e = \sqrt{b}(\zeta_D \tan\theta)$$

Asymmetric Geometry

In general the diffracting planes are not precisely aligned with the surface of the crystal.

Parameterized by the asymmetry angle $0 < \alpha < \theta_{Bragg}$

This leads to a beam compression

$$b = \frac{\sin\theta_i}{\sin\theta_e} = \frac{\sin(\theta+\alpha)}{\sin(\theta-\alpha)}$$

$$H_e = \frac{H_i}{b}$$

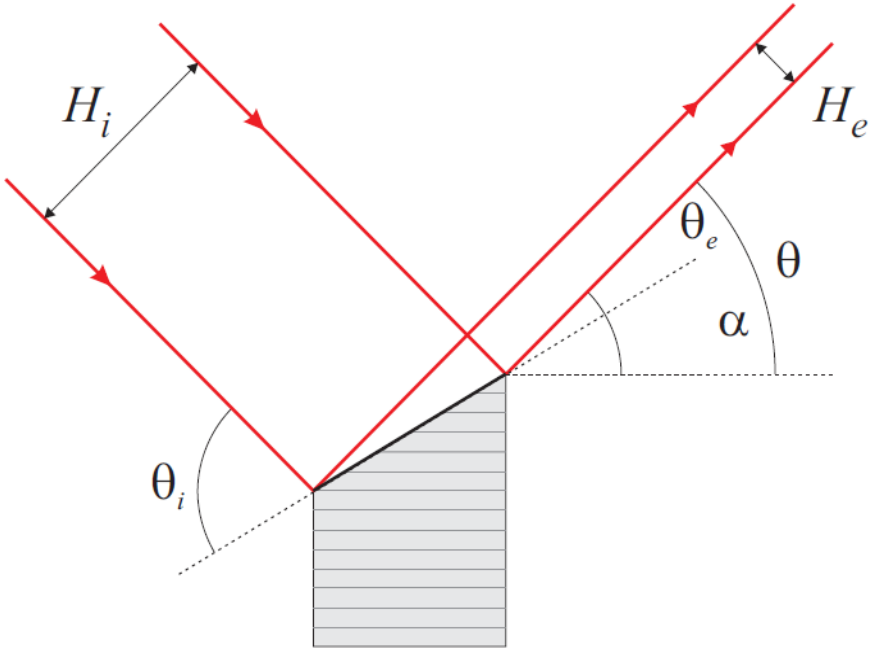

according to Liouville's theorem, the divergence of the beam must also change

$$\delta\theta_e = \sqrt{b}(\zeta_D \tan\theta)$$

$$\delta\theta_i = \frac{1}{\sqrt{b}}(\zeta_D \tan\theta)$$

$$\delta\theta_i H_i = \frac{1}{\sqrt{b}}(\zeta_D \tan\theta) b H_e = \sqrt{b}(\zeta_D \tan\theta) = \delta\theta_e H_e$$

Rocking Curve Measurements

The measured "rocking" curve from a two crystal system is a convolution of the Darwin curves of both crystals.

Rocking Curve Measurements

The measured "rocking" curve from a two crystal system is a convolution of the Darwin curves of both crystals. When the two crystals have a matched asymmetry, we get a triangle.

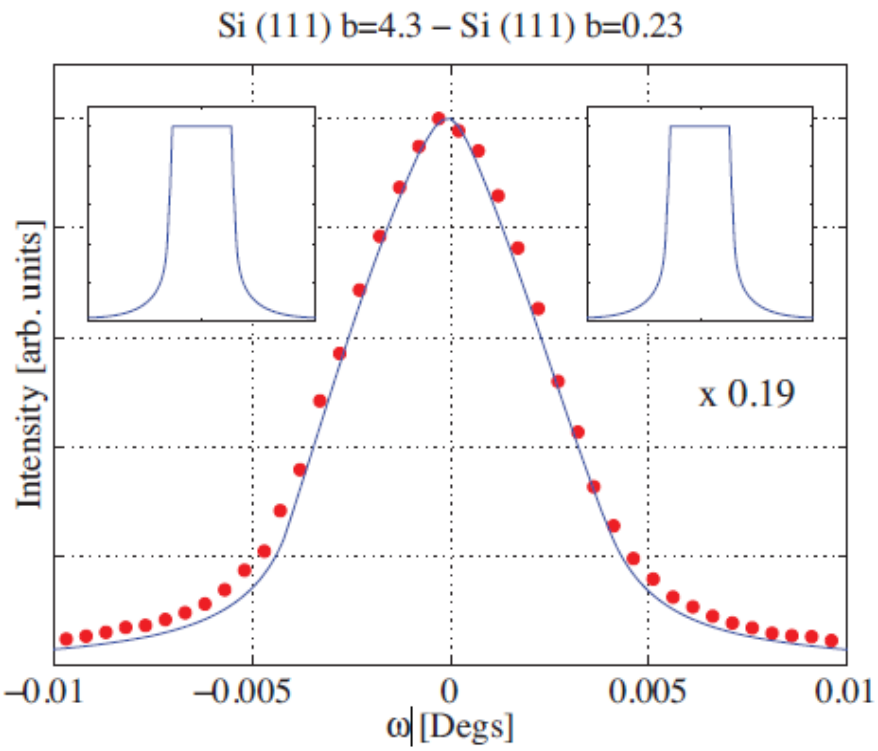

output divergence on left, input divergence on right

Rocking Curve Measurements

The measured "rocking" curve from a two crystal system is a convolution of the Darwin curves of both crystals. When the two crystals have a matched asymmetry, we get a triangle.

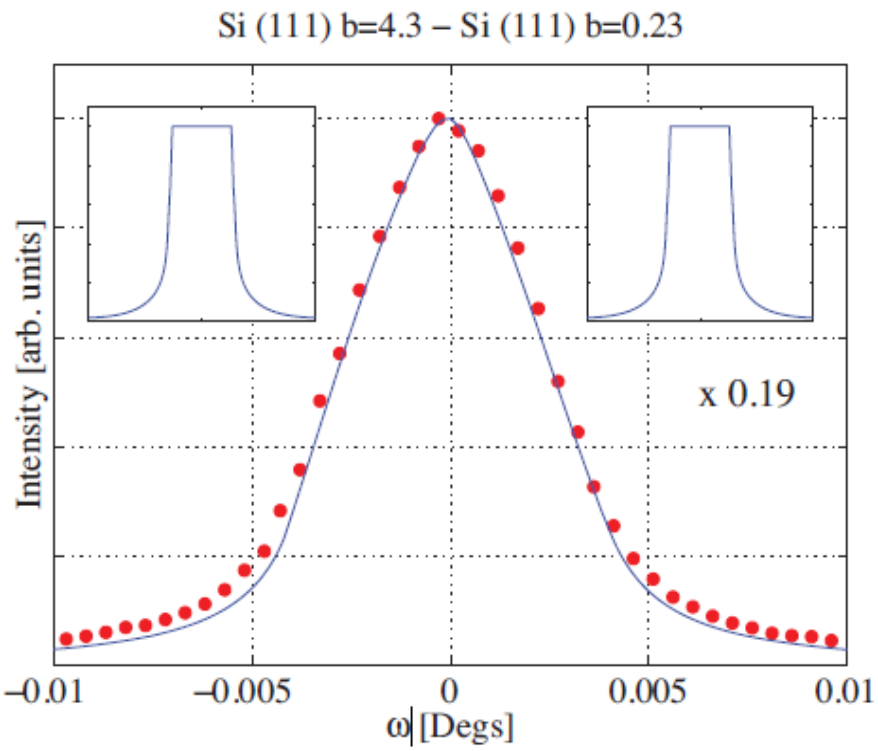

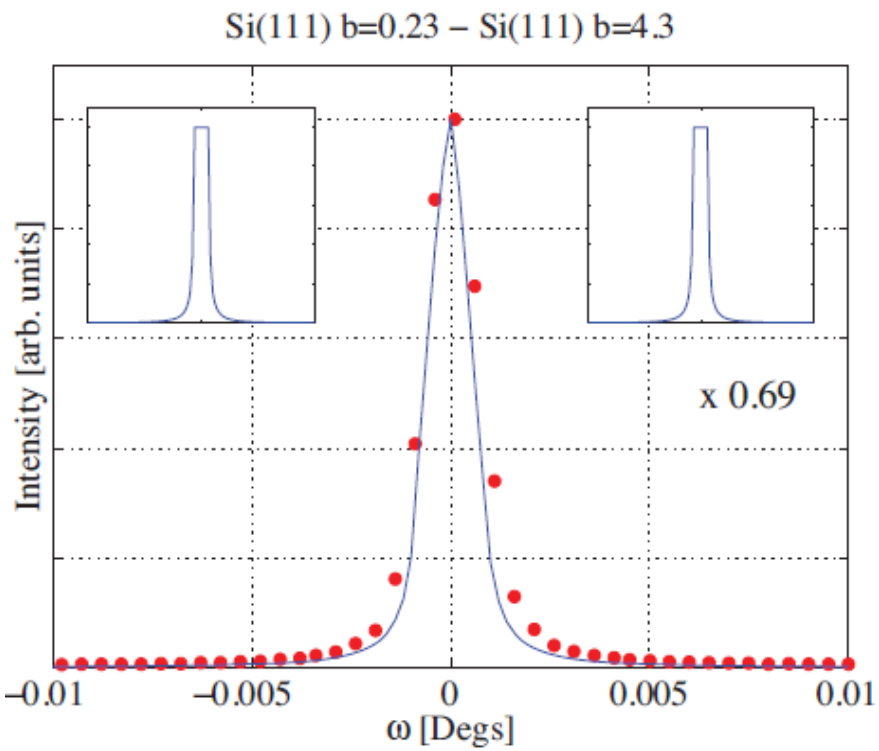

output divergence on left, input divergence on right

Rocking Curve Measurements

The measured "rocking" curve from a two crystal system is a convolution of the Darwin curves of both crystals. When the two crystals have a matched asymmetry, we get a triangle. When one asymmetry is much higher, then we can measure the Darwin curve of a single crystal.

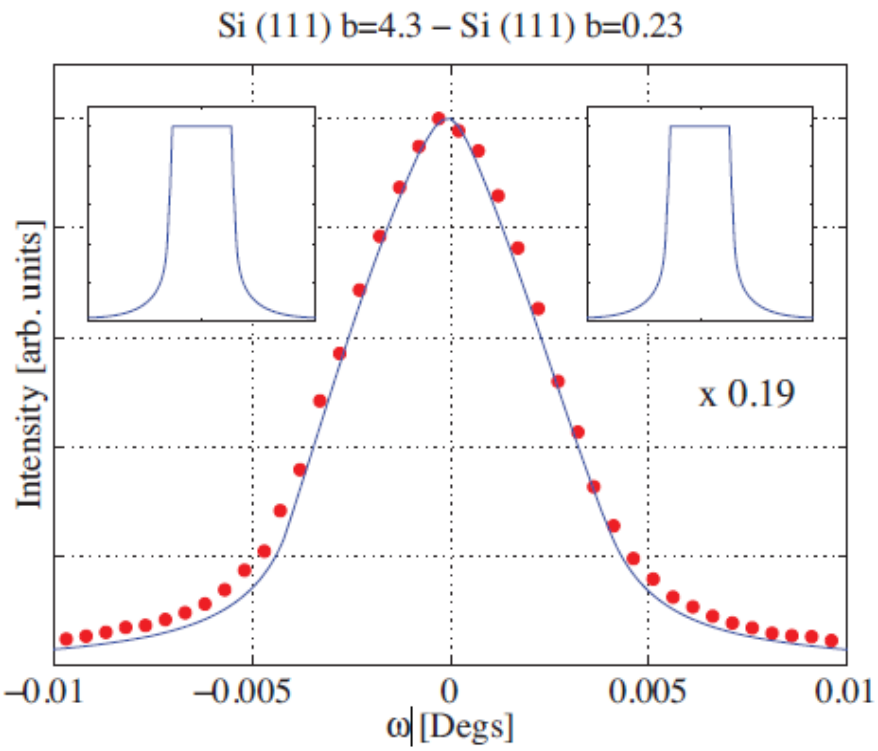

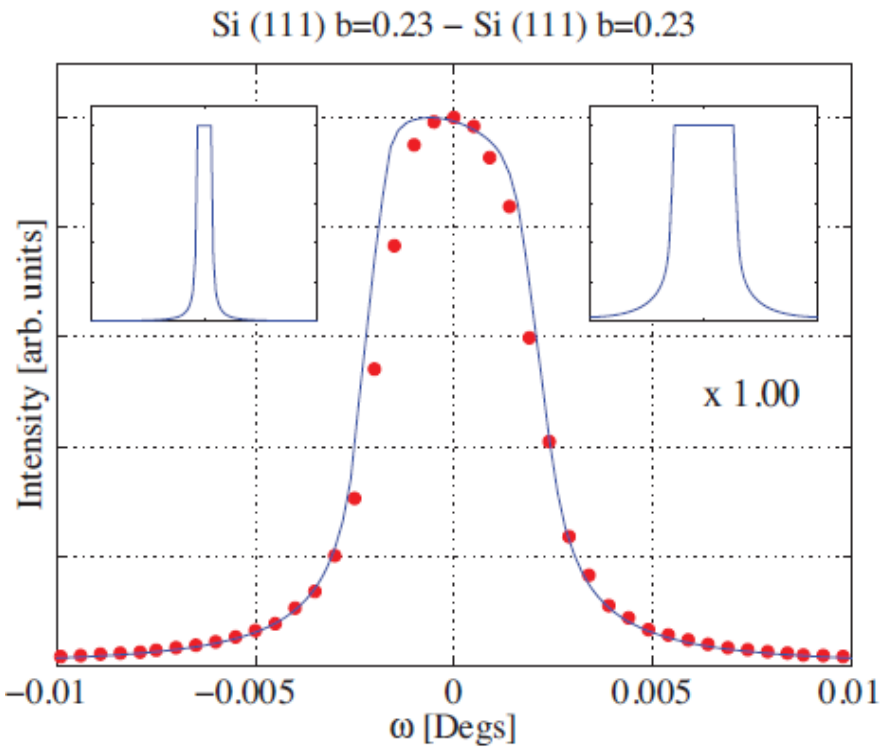

output divergence on left, input divergence on right

Dumond diagram: no Darwin width

Transfer function of an optical element parameterized by angle and wavelength.

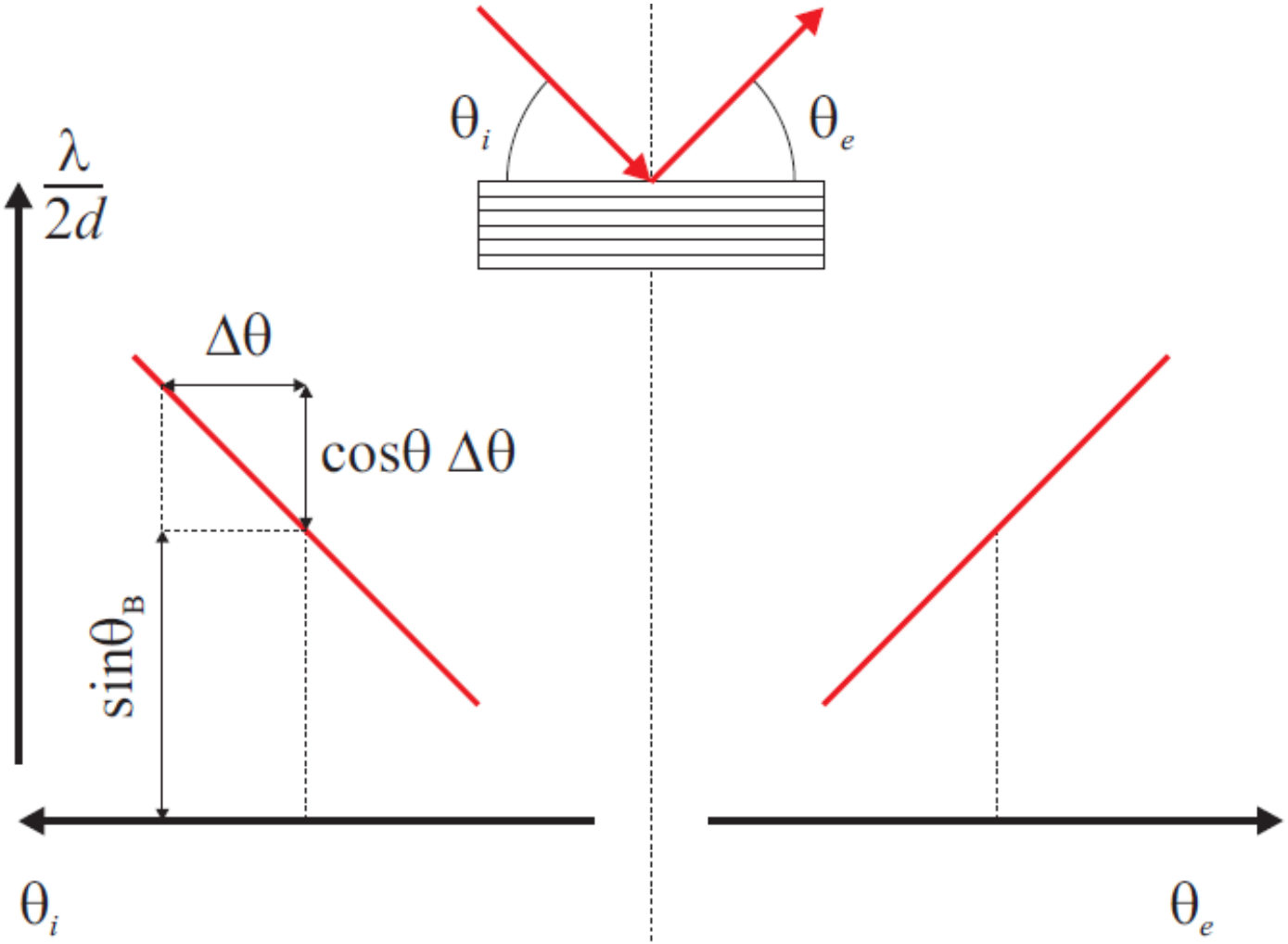

Dumond diagram: no Darwin width

Transfer function of an optical element parameterized by angle and wavelength. Here Darwin width is ignored.

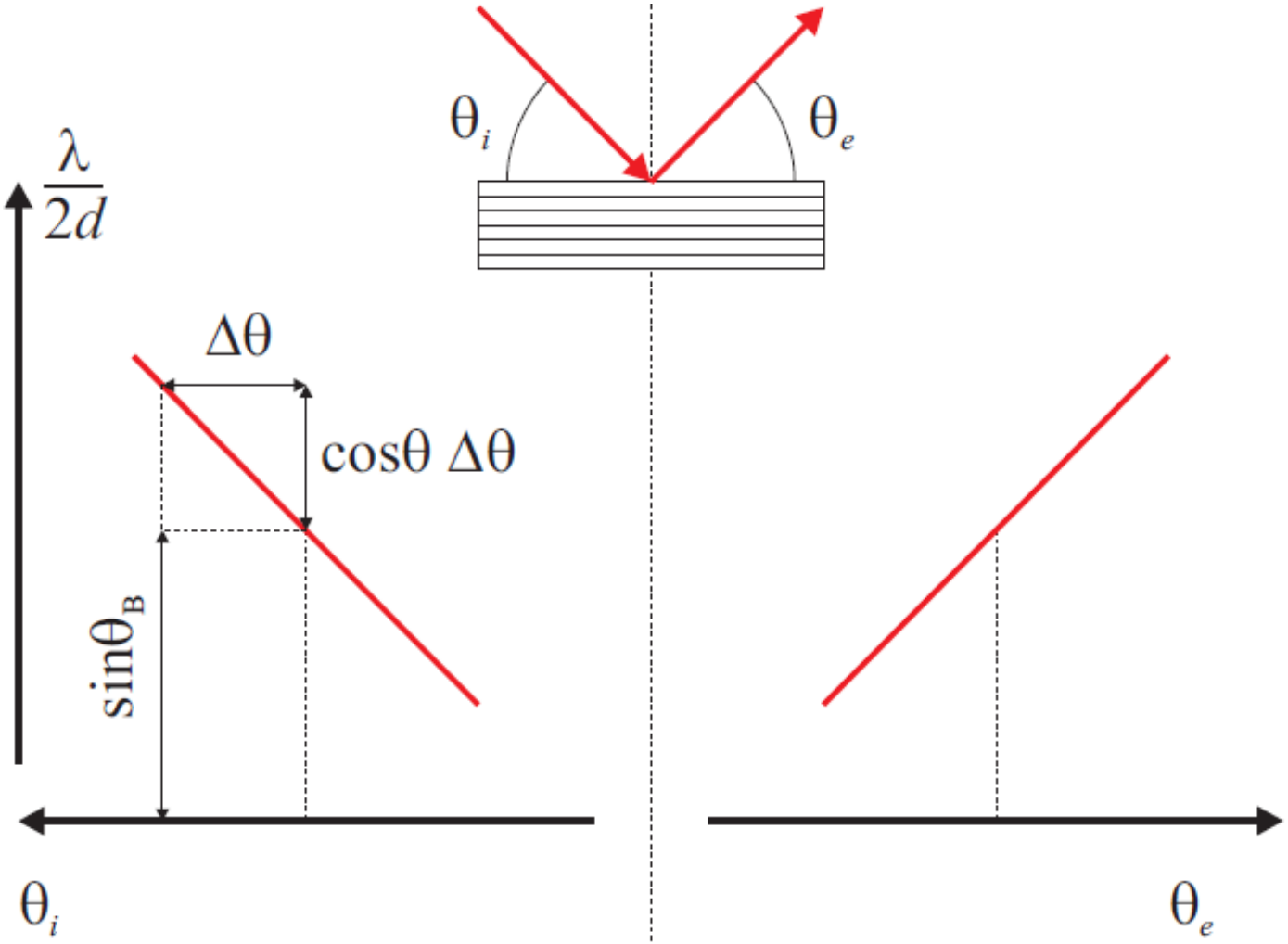

Dumond diagram: symmetric Bragg

Including the Darwin width, we have a bandpass in wavelength.

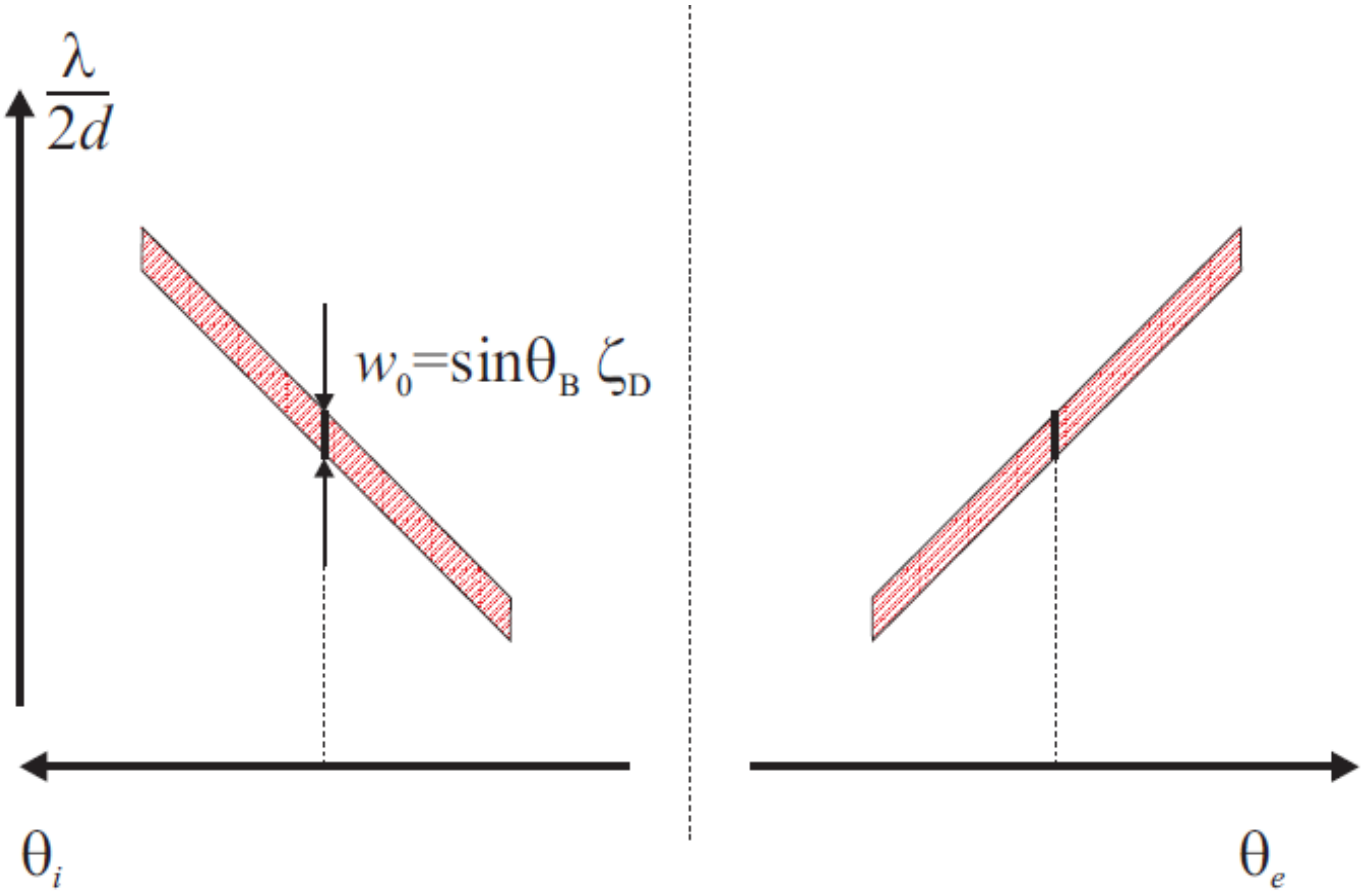

Dumond diagram: symmetric Bragg

Including the Darwin width, we have a bandpass in wavelength. If input beam is perfectly collimated, so is output (vertical black line).

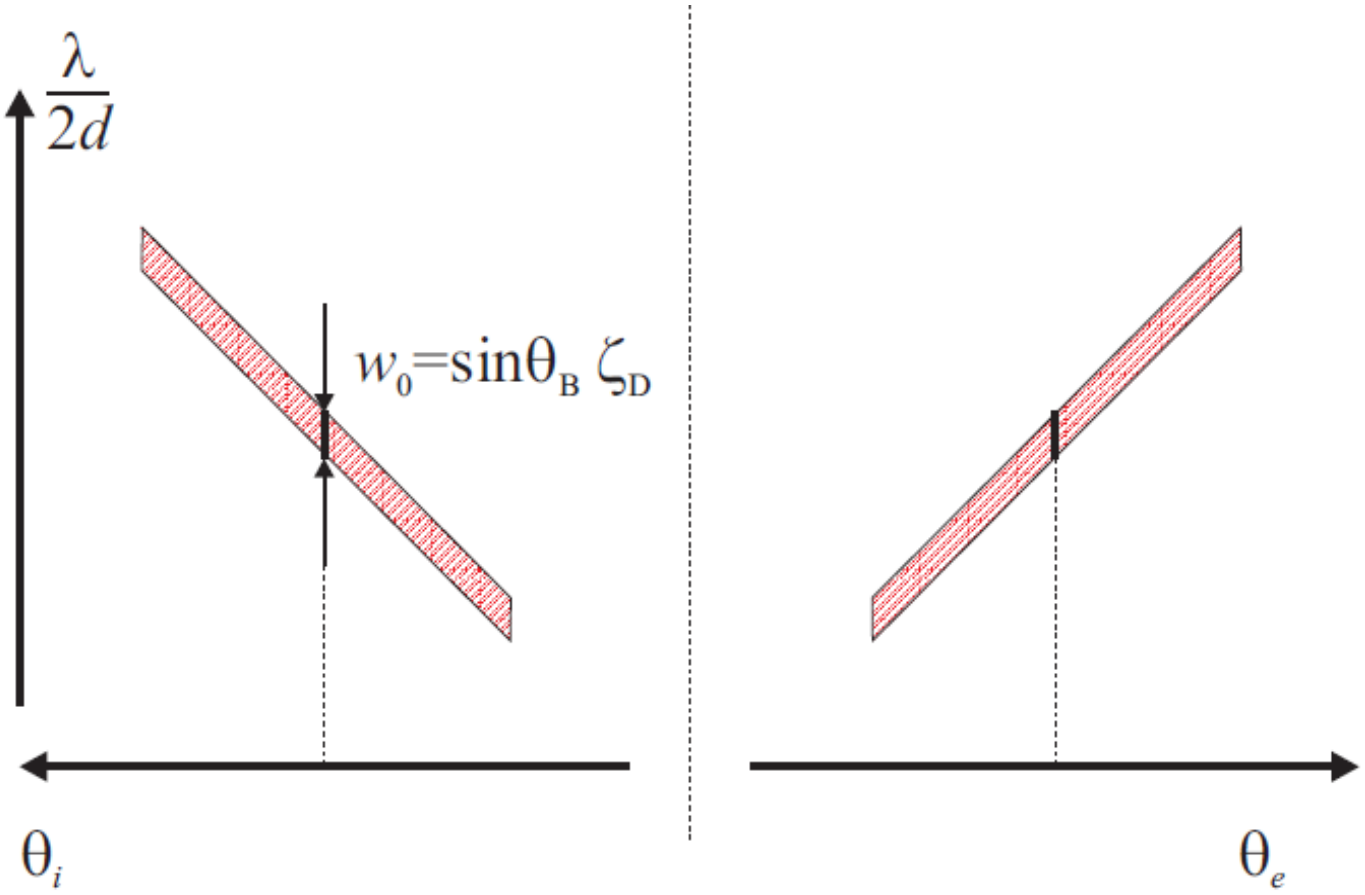

Dumond diagram: asymmetric Bragg

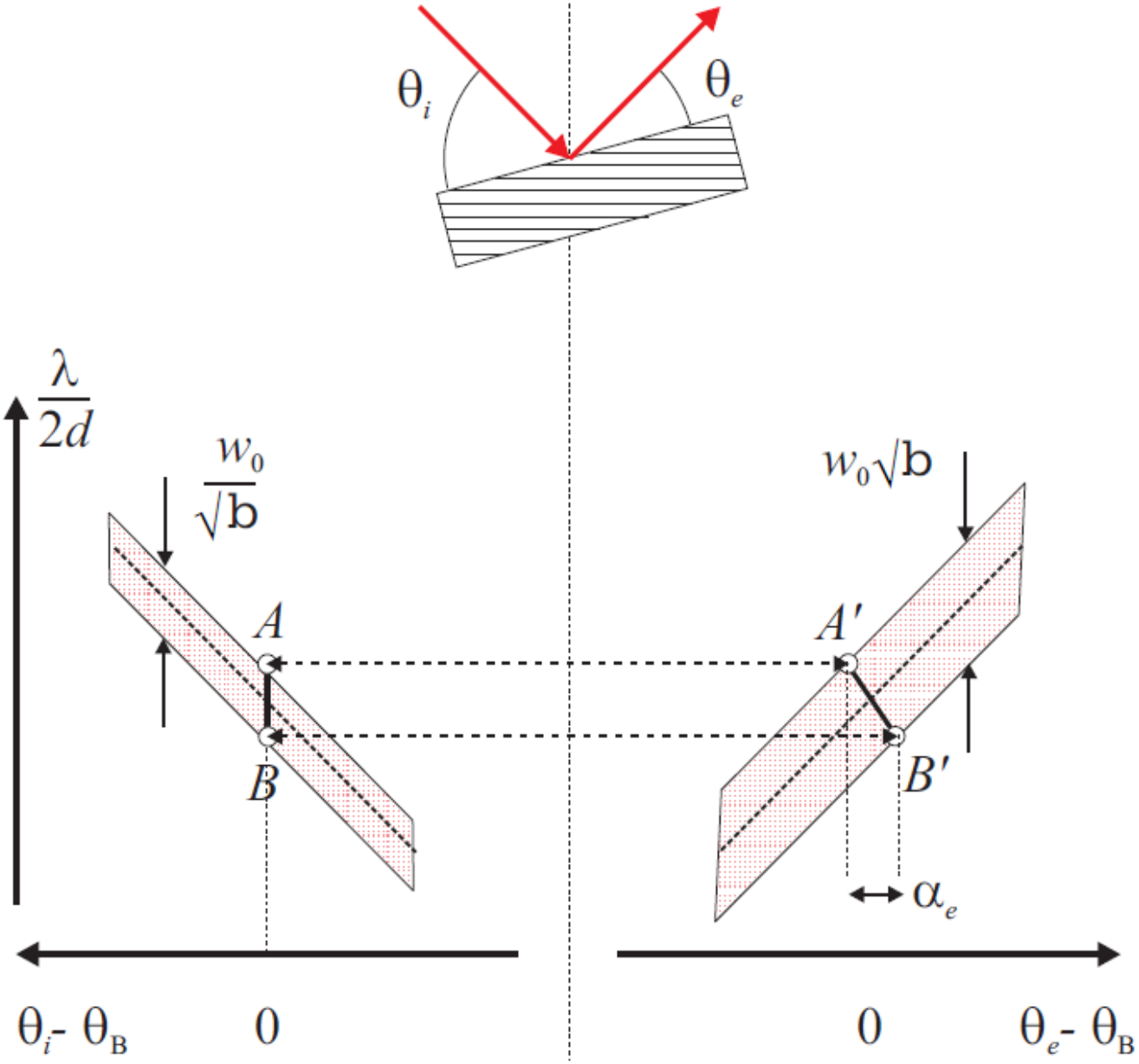

Double Crystal Monochromators

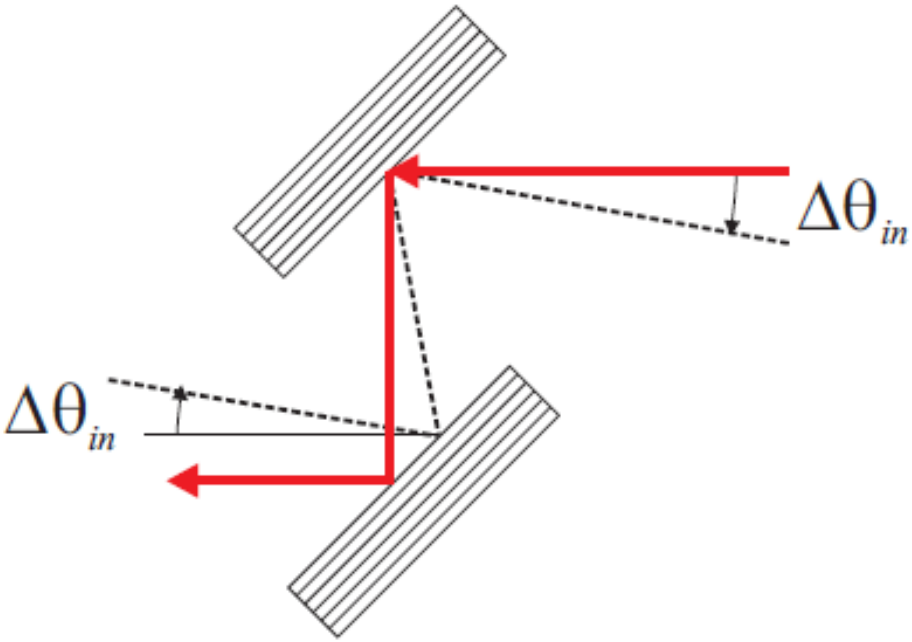

Double Crystal Monochromators

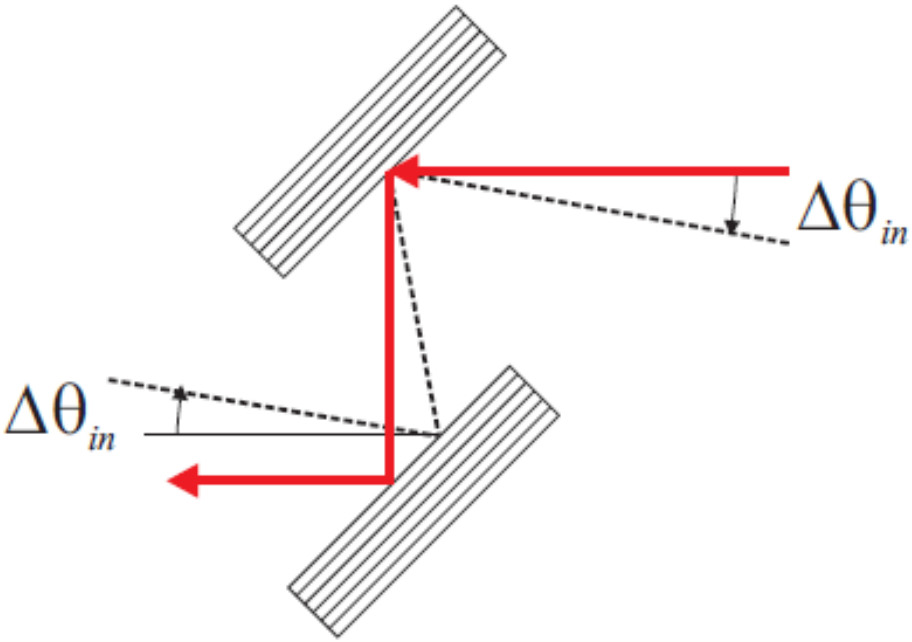

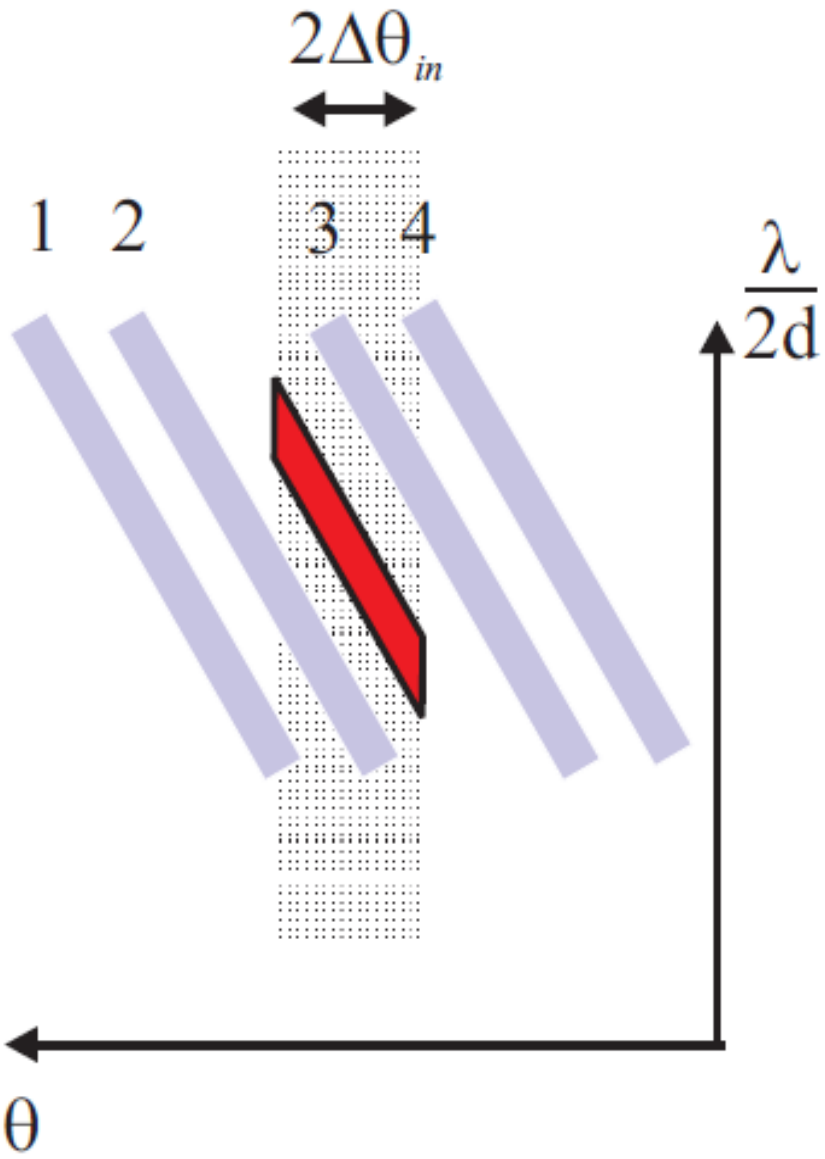

Double Crystal Monochromators

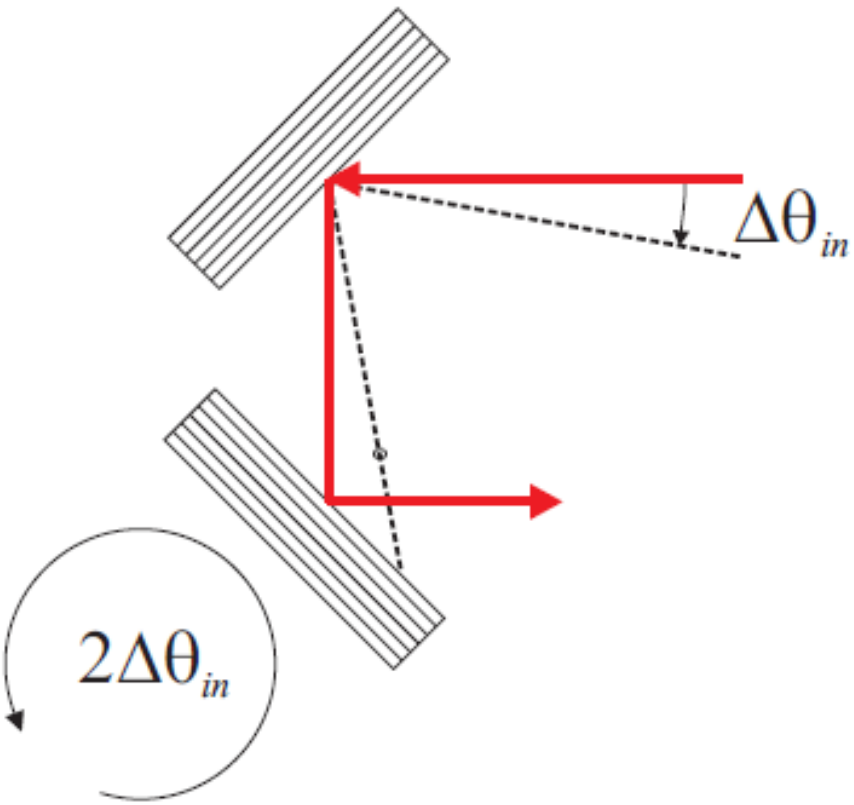

Double Crystal Monochromators

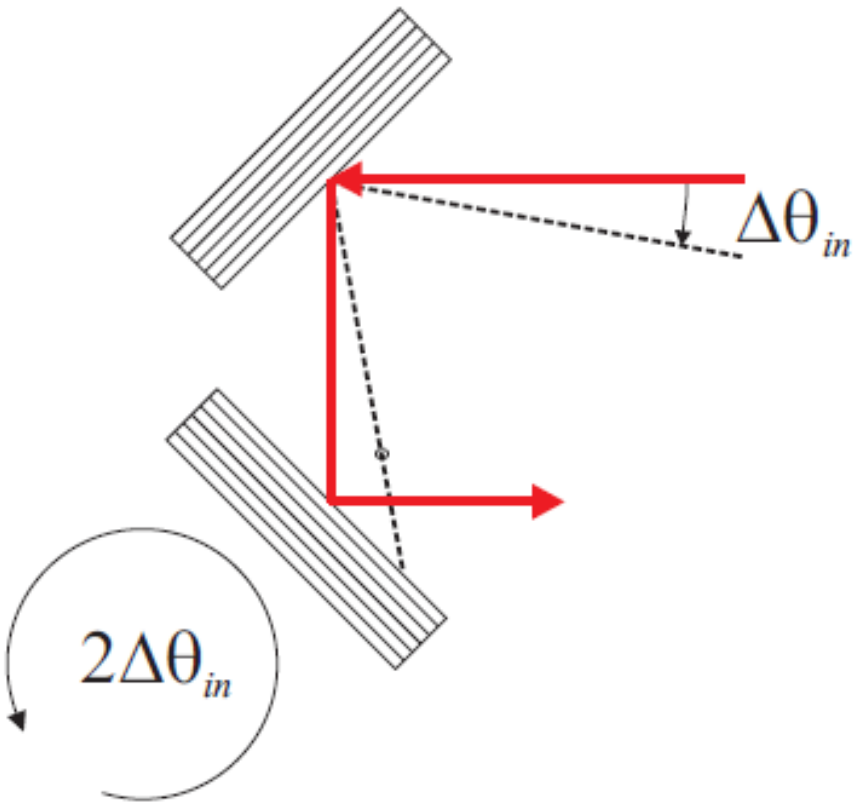

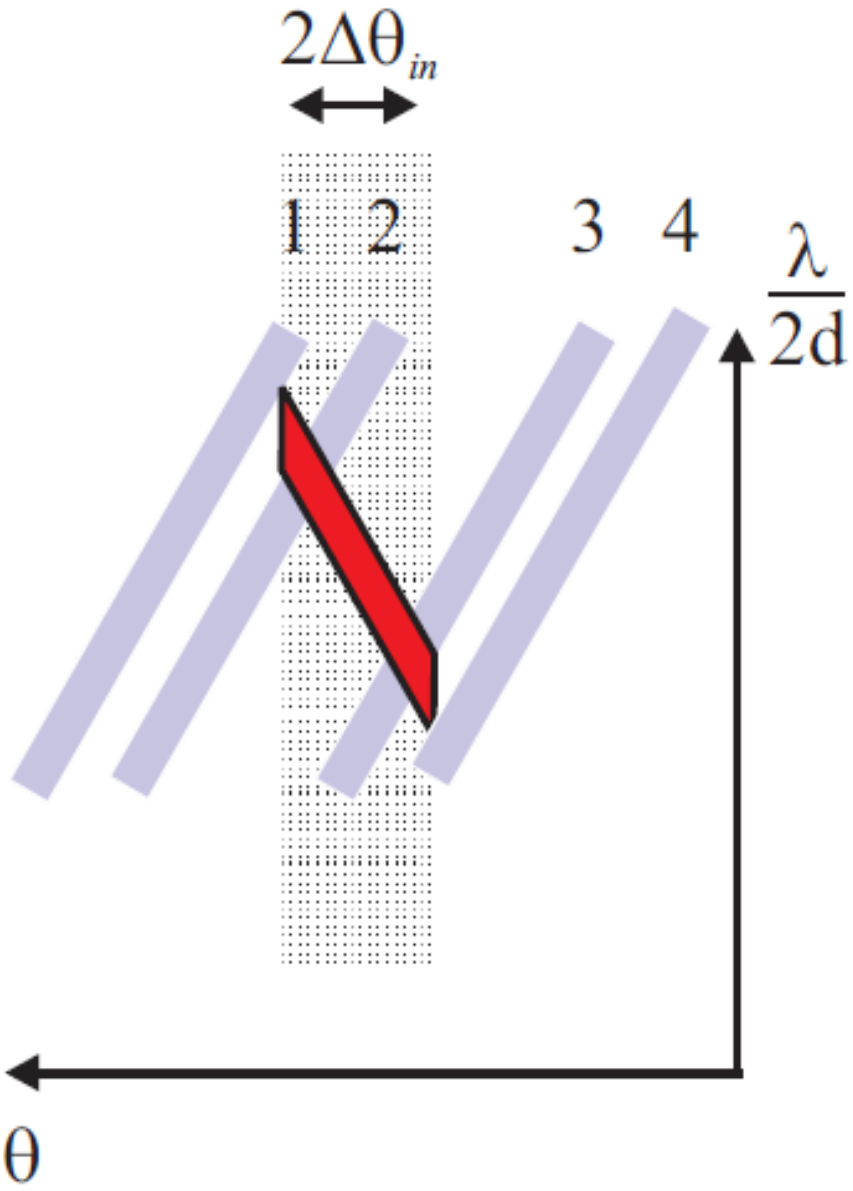

Total Cross Section

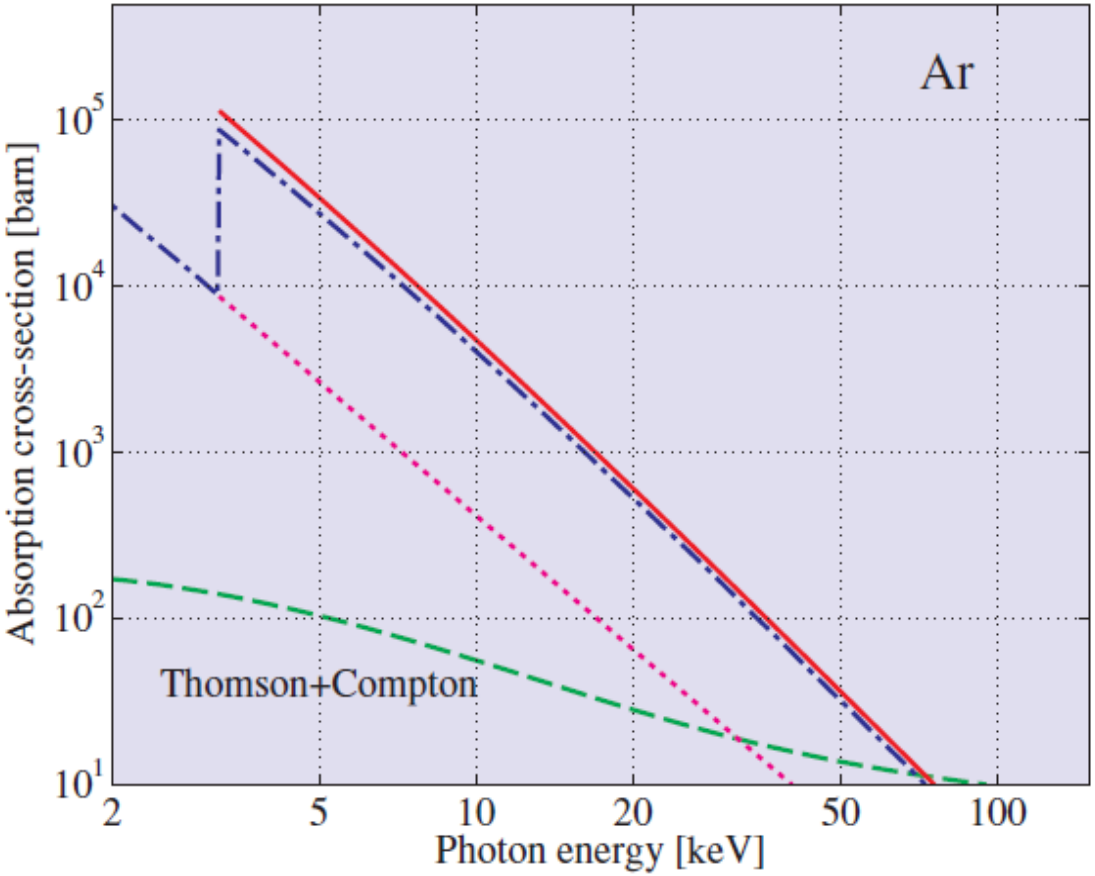

The total cross-section for photon "absorption" includes elastic (or coherent) scattering, Compton (inelastic) scattering, and photoelectric absorption.

Total Cross Section

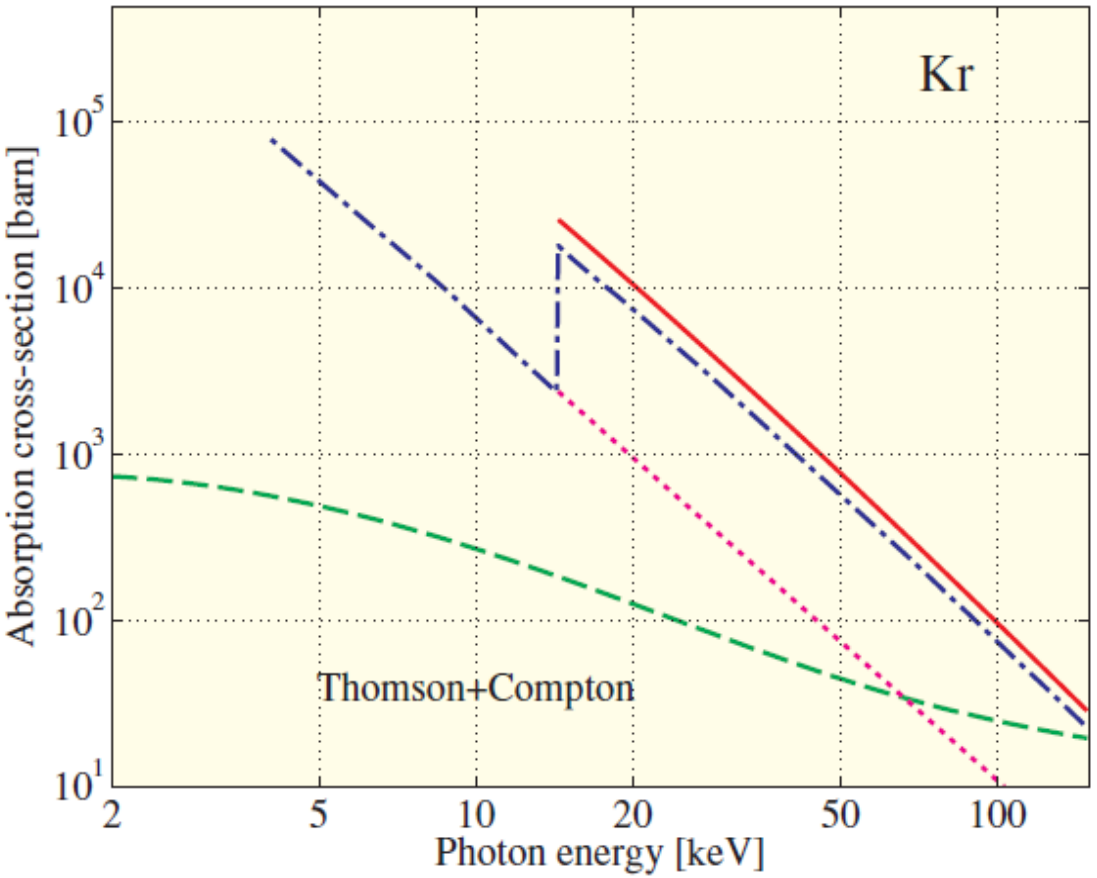

The total cross-section for photon "absorption" includes elastic (or coherent) scattering, Compton (inelastic) scattering, and photoelectric absorption.

Characteristic absorption jumps depend on the element

Total Cross Section

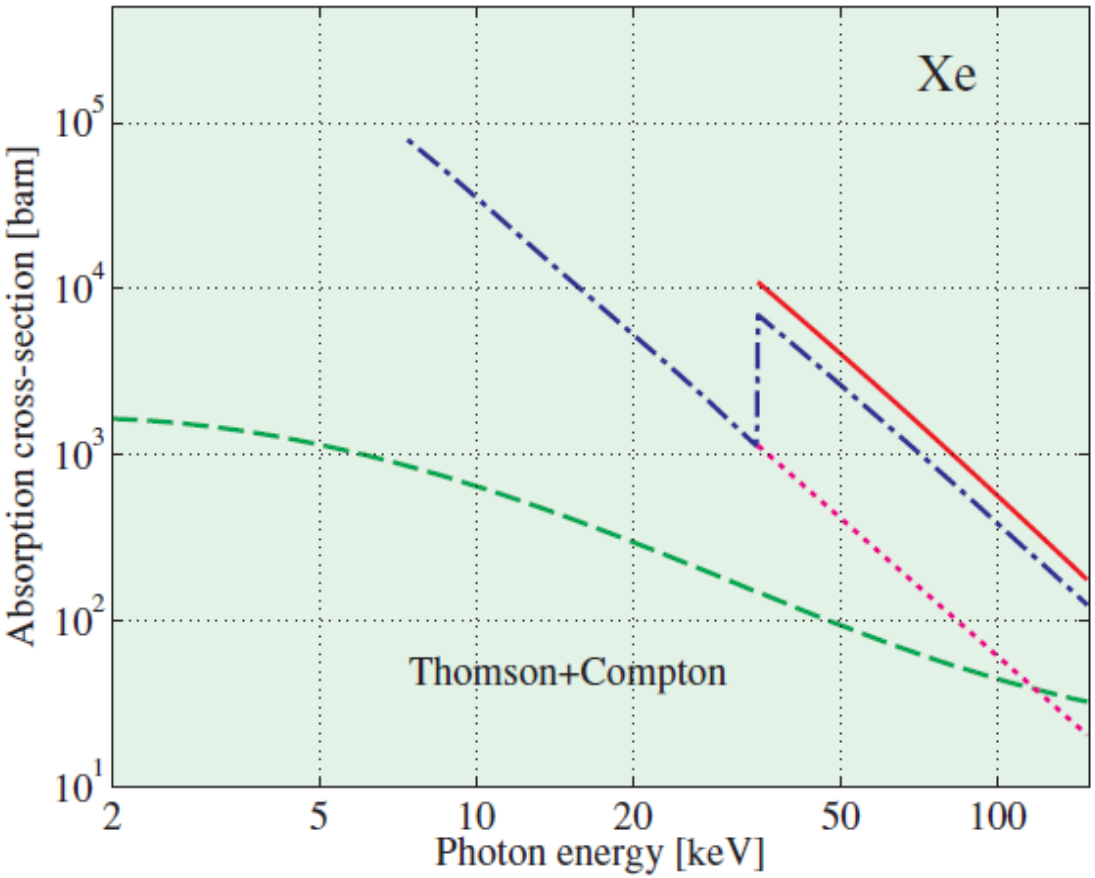

The total cross-section for photon "absorption" includes elastic (or coherent) scattering, Compton (inelastic) scattering, and photoelectric absorption.

Characteristic absorption jumps depend on the element

These quantities vary significantly over many decades but can easily put on an equal footing.

Scaled Absorption

$$T = \frac{I}{I_o} = e^{-\mu z}$$

Scaled Absorption

$$T = \frac{I}{I_o} = e^{-\mu z}$$

$$\mu = \frac{\rho_m N_A}{M} \sigma_a$$

Scaled Absorption

$$T = \frac{I}{I_o} = e^{-\mu z}$$

$$\mu = \frac{\rho_m N_A}{M} \sigma_a$$

$$\sigma_a \sim \frac{Z^4}{E^3}$$

Scaled Absorption

$$T = \frac{I}{I_o} = e^{-\mu z}$$

$$\mu = \frac{\rho_m N_A}{M} \sigma_a$$

$$\sigma_a \sim \frac{Z^4}{E^3}$$

scale σ_a for different elements by E^3/Z^4 and plot together

Scaled Absorption

$$T = \frac{I}{I_o} = e^{-\mu z}$$

$$\mu = \frac{\rho_m N_A}{M} \sigma_a$$

$$\sigma_a \sim \frac{Z^4}{E^3}$$

scale σ_a for different elements by E^3/Z^4 and plot together

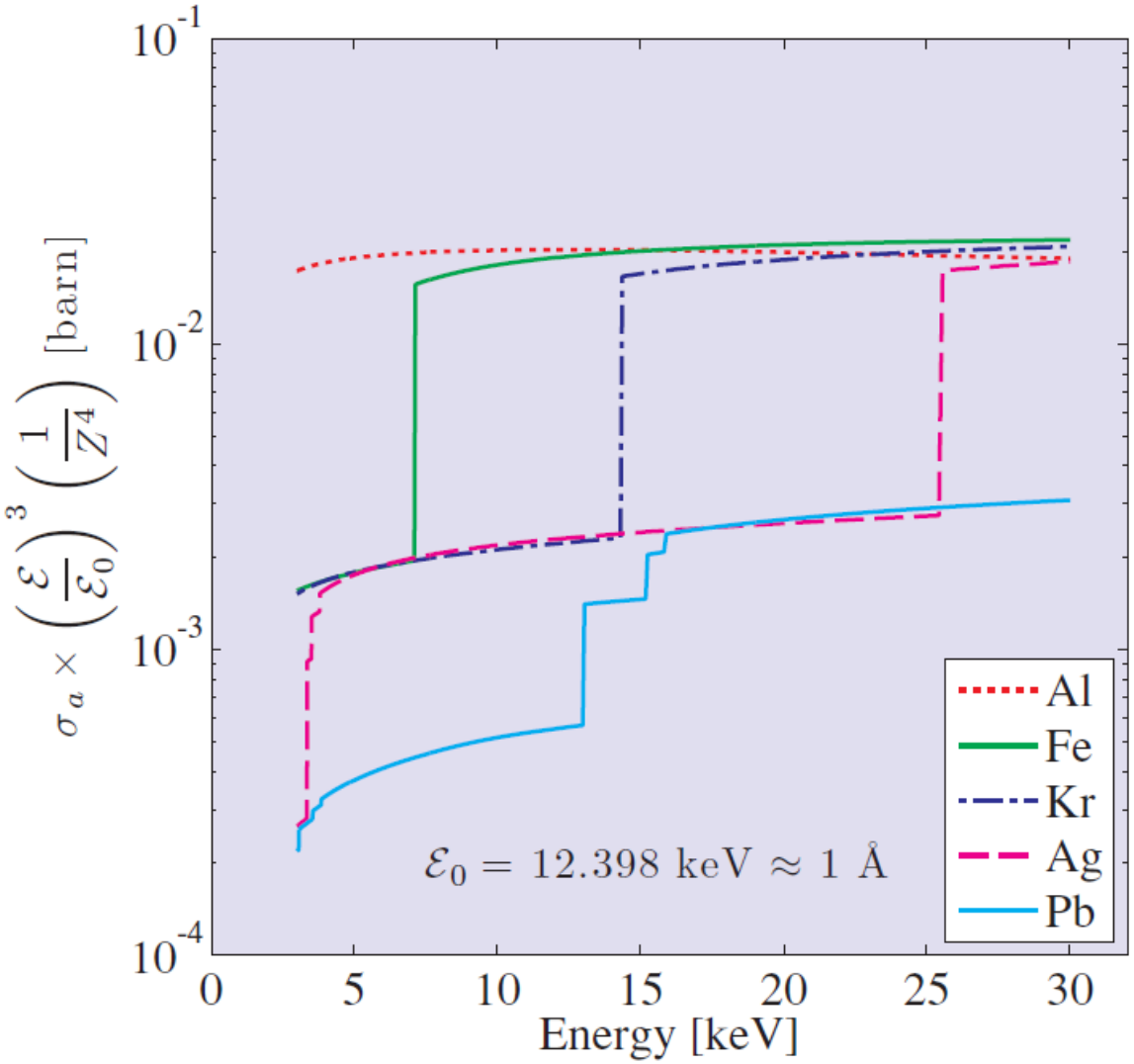

remarkably, all values lie on a common curve above the K edge and between the L and K edges and below the L edge

Scaled Absorption

$$T = \frac{I}{I_o} = e^{-\mu z}$$

$$\mu = \frac{\rho_m N_A}{M} \sigma_a$$

$$\sigma_a \sim \frac{Z^4}{E^3}$$

scale σ_a for different elements by E^3/Z^4 and plot together

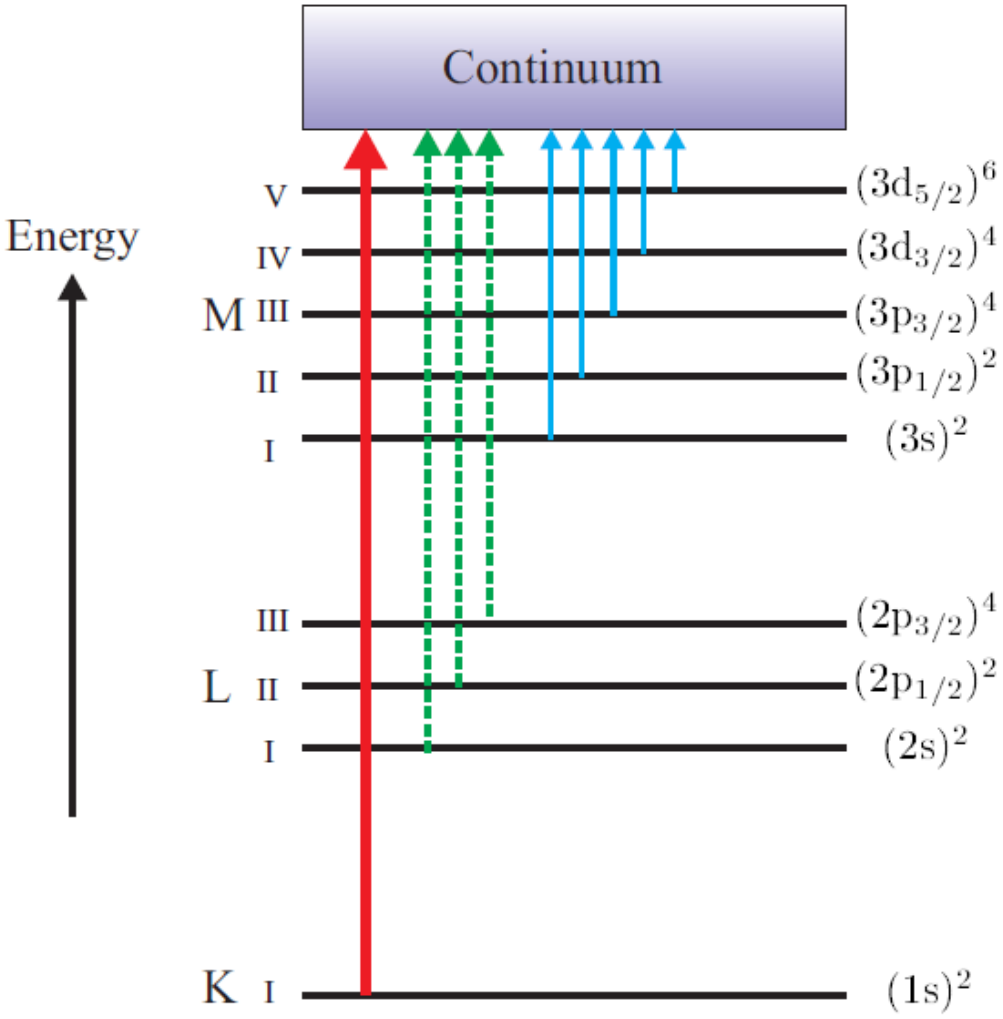

remarkably, all values lie on a common curve above the K edge and between the L and K edges and below the L edge

Calculation of σ_a

From first-order perturbation theory, the absorption cross section is given by

Calculation of σ_a

From first-order perturbation theory, the absorption cross section is given by

$$\sigma_a = \frac{2\pi}{\hbar c}\frac{V^2}{4\pi^3}\int |M_{if}|^2 \delta(\mathcal{E}_f - \mathcal{E}_i) q^2 \sin\theta dq d\theta d\varphi$$

Calculation of σ_a

From first-order perturbation theory, the absorption cross section is given by

$$\sigma_a = \frac{2\pi}{\hbar c}\frac{V^2}{4\pi^3}\int |M_{if}|^2 \delta(\mathcal{E}_f - \mathcal{E}_i) q^2 \sin\theta dq d\theta d\varphi$$

where the matrix element M_{if} between the initial, $\langle i|$, and final, $|f\rangle$, states is given by

Calculation of σ_a

From first-order perturbation theory, the absorption cross section is given by

$$\sigma_a = \frac{2\pi}{\hbar c}\frac{V^2}{4\pi^3}\int |M_{if}|^2 \delta(\mathcal{E}_f - \mathcal{E}_i) q^2 \sin\theta dq d\theta d\varphi$$

where the matrix element M_{if} between the initial, $\langle i|$, and final, $|f\rangle$, states is given by

$$M_{if} = \langle i|\mathcal{H}_I|f\rangle$$

Calculation of σ_a

From first-order perturbation theory, the absorption cross section is given by

$$\sigma_a = \frac{2\pi}{\hbar c}\frac{V^2}{4\pi^3}\int |M_{if}|^2 \delta(\mathcal{E}_f - \mathcal{E}_i) q^2 \sin\theta dq d\theta d\varphi$$

where the matrix element M_{if} between the initial, $\langle i|$, and final, $|f\rangle$, states is given by

$$M_{if} = \langle i|\mathcal{H}_I|f\rangle$$

The interaction Hamiltonian is expressed in terms of the electromagnetic vector potential

$$\mathcal{H}_I = \frac{e\vec{p}\cdot\vec{A}}{m} + \frac{e^2A^2}{2m}$$

Calculation of σ_a

From first-order perturbation theory, the absorption cross section is given by

$$\sigma_a = \frac{2\pi}{\hbar c}\frac{V^2}{4\pi^3}\int |M_{if}|^2 \delta(\mathcal{E}_f - \mathcal{E}_i) q^2 \sin\theta dq d\theta d\varphi$$

where the matrix element M_{if} between the initial, $\langle i|$, and final, $|f\rangle$, states is given by

$$M_{if} = \langle i|\mathcal{H}_I|f\rangle$$

The interaction Hamiltonian is expressed in terms of the electromagnetic vector potential

$$\mathcal{H}_I = \frac{e\vec{p}\cdot\vec{A}}{m} + \frac{e^2A^2}{2m}$$

$$\vec{A} = \hat{\varepsilon}\sqrt{\frac{\hbar}{2\epsilon_0 V\omega}}\left[a_k e^{i\vec{k}\cdot\vec{r}} + a_k^\dagger e^{-i\vec{k}\cdot\vec{r}}\right]$$

Calculation of σ_a

From first-order perturbation theory, the absorption cross section is given by

$$\sigma_a = \frac{2\pi}{\hbar c}\frac{V^2}{4\pi^3}\int |M_{if}|^2 \delta(\mathcal{E}_f - \mathcal{E}_i) q^2 \sin\theta dq d\theta d\varphi$$

where the matrix element M_{if} between the initial, $\langle i|$, and final, $|f\rangle$, states is given by

$$M_{if} = \langle i|\mathcal{H}_I|f\rangle$$

The interaction Hamiltonian is expressed in terms of the electromagnetic vector potential

$$\mathcal{H}_I = \frac{e\vec{p}\cdot\vec{A}}{m} + \frac{e^2A^2}{2m}$$

$$\vec{A} = \hat{\varepsilon}\sqrt{\frac{\hbar}{2\epsilon_0 V\omega}}\left[a_k e^{i\vec{k}\cdot\vec{r}} + a_k^\dagger e^{-i\vec{k}\cdot\vec{r}}\right]$$

The first term gives absorption

Calculation of σ_a

From first-order perturbation theory, the absorption cross section is given by

$$\sigma_a = \frac{2\pi}{\hbar c}\frac{V^2}{4\pi^3}\int |M_{if}|^2 \delta(\mathcal{E}_f - \mathcal{E}_i) q^2 \sin\theta dq d\theta d\varphi$$

where the matrix element M_{if} between the initial, $\langle i|$, and final, $|f\rangle$, states is given by

$$M_{if} = \langle i|\mathcal{H}_I|f\rangle$$

The interaction Hamiltonian is expressed in terms of the electromagnetic vector potential

$$\mathcal{H}_I = \frac{e\vec{p}\cdot\vec{A}}{m} + \frac{e^2A^2}{2m}$$

$$\vec{A} = \hat{\varepsilon}\sqrt{\frac{\hbar}{2\epsilon_0 V\omega}}\left[a_k e^{i\vec{k}\cdot\vec{r}} + a_k^\dagger e^{-i\vec{k}\cdot\vec{r}}\right]$$

The first term gives absorption while the second produces Thomson scattering so we take only the first into consideration now.

Free electron approximation

In order to evaluate the M_{if} matrix element we define the initial and final states

Free electron approximation

In order to evaluate the M_{if} matrix element we define the initial and final states

the initial state has a photon and a K electron
(no free electron)

Free electron approximation

In order to evaluate the M_{if} matrix element we define the initial and final states

the initial state has a photon and a K electron
(no free electron)

$$|i\rangle = |1\rangle_\gamma |0\rangle_e$$

Free electron approximation

In order to evaluate the M_{if} matrix element we define the initial and final states

the initial state has a photon and a K electron (no free electron)

$$|i\rangle = |1\rangle_\gamma |0\rangle_e$$

similarly, the final state has no photon and an ejected free electron (ignoring the core hole and charged ion)

Free electron approximation

In order to evaluate the M_{if} matrix element we define the initial and final states

the initial state has a photon and a K electron (no free electron)

$$|i\rangle = |1\rangle_\gamma |0\rangle_e$$

similarly, the final state has no photon and an ejected free electron (ignoring the core hole and charged ion)

$$\langle f| = {}_e\langle 1|_\gamma \langle 0|$$

Free electron approximation

In order to evaluate the M_{if} matrix element we define the initial and final states

the initial state has a photon and a K electron (no free electron)

$$|i\rangle = |1\rangle_\gamma |0\rangle_e$$

similarly, the final state has no photon and an ejected free electron (ignoring the core hole and charged ion)

$$\langle f| = {}_e\langle 1|_\gamma \langle 0|$$

Thus

$$M_{if} = \frac{e}{m}\sqrt{\frac{\hbar}{2\epsilon_0 V\omega}}\left[{}_e\langle 1|_\gamma\langle 0|(\vec{p}\cdot\hat{\varepsilon})ae^{i\vec{k}\cdot\vec{r}} + (\vec{p}\cdot\hat{\varepsilon})a^\dagger e^{-i\vec{k}\cdot\vec{r}}|1\rangle_\gamma|0\rangle_e\right]$$

Free electron approximation

In order to evaluate the M_{if} matrix element we define the initial and final states

the initial state has a photon and a K electron (no free electron)

$$|i\rangle = |1\rangle_\gamma |0\rangle_e$$

similarly, the final state has no photon and an ejected free electron (ignoring the core hole and charged ion)

$$\langle f| = {}_e\langle 1|_\gamma \langle 0|$$

Thus

$$M_{if} = \frac{e}{m}\sqrt{\frac{\hbar}{2\epsilon_0 V\omega}}\left[{}_e\langle 1|_\gamma\langle 0|(\vec{p}\cdot\hat{\varepsilon})ae^{i\vec{k}\cdot\vec{r}} + (\vec{p}\cdot\hat{\varepsilon})a^\dagger e^{-i\vec{k}\cdot\vec{r}}|1\rangle_\gamma|0\rangle_e\right]$$

The calculation is simplified if the interaction Hamiltonian is applied to the left since the final state has only a free electron and no photon

Free electron approximation

The free electron state is an eigenfunction of the electron momentum operator

Free electron approximation

$$_e\langle 1|\vec{p} = (\hbar\vec{q})_e\langle 1|$$

The free electron state is an eigenfunction of the electron momentum operator

Free electron approximation

$$_e\langle 1|\vec{p} = (\hbar\vec{q})_e\langle 1|$$

The free electron state is an eigenfunction of the electron momentum operator

The annihilation operator applied to the left creates a photon

Free electron approximation

$$_e\langle 1|\vec{p} = (\hbar\vec{q})_e\langle 1|$$

The free electron state is an eigenfunction of the electron momentum operator

$$_\gamma\langle n|a = (\sqrt{n+1})_\gamma\langle n+1|a$$

The annihilation operator applied to the left creates a photon

Free electron approximation

$$_e\langle 1|\vec{p} = (\hbar\vec{q})_e\langle 1|$$

$$_\gamma\langle n|a = (\sqrt{n+1})_\gamma\langle n+1|a$$

The free electron state is an eigenfunction of the electron momentum operator

The annihilation operator applied to the left creates a photon while the creation operator annihilates a photon when applied to the left.

Free electron approximation

$$_e\langle 1|\vec{p} = (\hbar\vec{q})_e\langle 1|$$

$$_\gamma\langle n|a = (\sqrt{n+1})_\gamma\langle n+1|a$$

$$_\gamma\langle n|a^\dagger = (\sqrt{n})_\gamma\langle n-1|a$$

The free electron state is an eigenfunction of the electron momentum operator

The annihilation operator applied to the left creates a photon while the creation operator annihilates a photon when applied to the left.

Free electron approximation

$$_e\langle 1|\vec{p} = (\hbar\vec{q})_e\langle 1|$$

The free electron state is an eigenfunction of the electron momentum operator

$$_\gamma\langle n|a = (\sqrt{n+1})_\gamma\langle n+1|a$$

$$_\gamma\langle n|a^\dagger = (\sqrt{n})_\gamma\langle n-1|a$$

The annihilation operator applied to the left creates a photon while the creation operator annihilates a photon when applied to the left.

$$_e\langle 1|_\gamma\langle 0|(\vec{p}\cdot\hat{\varepsilon})a = \hbar(\vec{q}\cdot\hat{\varepsilon})_e\langle 1|_\gamma\langle 1|$$

Free electron approximation

$$_e\langle 1|\vec{p} = (\hbar\vec{q})_e\langle 1|$$

The free electron state is an eigenfunction of the electron momentum operator

$$_\gamma\langle n|a = (\sqrt{n+1})_\gamma\langle n+1|a$$

$$_\gamma\langle n|a^\dagger = (\sqrt{n})_\gamma\langle n-1|a$$

The annihilation operator applied to the left creates a photon while the creation operator annihilates a photon when applied to the left.

$$_e\langle 1|_\gamma\langle 0|(\vec{p}\cdot\hat{\varepsilon})a = \hbar(\vec{q}\cdot\hat{\varepsilon})_e\langle 1|_\gamma\langle 1|$$

$$_e\langle 1|_\gamma\langle 0|(\vec{p}\cdot\hat{\varepsilon})a^\dagger = 0$$

Free electron approximation

$$_e\langle 1|\vec{p} = (\hbar\vec{q})_e\langle 1|$$

The free electron state is an eigenfunction of the electron momentum operator

$$_\gamma\langle n|a = (\sqrt{n+1})_\gamma\langle n+1|a$$

$$_\gamma\langle n|a^\dagger = (\sqrt{n})_\gamma\langle n-1|a$$

The annihilation operator applied to the left creates a photon while the creation operator annihilates a photon when applied to the left.

$$_e\langle 1|_\gamma\langle 0|(\vec{p}\cdot\hat{\varepsilon})a = \hbar(\vec{q}\cdot\hat{\varepsilon})_e\langle 1|_\gamma\langle 1|$$

$$_e\langle 1|_\gamma\langle 0|(\vec{p}\cdot\hat{\varepsilon})a^\dagger = 0$$

$$M_{if} = \frac{e}{m}\sqrt{\frac{\hbar}{2\epsilon_0 V\omega}}\left[\hbar(\vec{q}\cdot\hat{\varepsilon})_e\langle 1|_\gamma\langle 1|e^{i\vec{k}\cdot\vec{r}}|1\rangle_\gamma|0\rangle_e + 0\right]$$

Free electron approximation

$$_e\langle 1|\vec{p} = (\hbar\vec{q})_e\langle 1|$$

The free electron state is an eigenfunction of the electron momentum operator

$$_\gamma\langle n|a = (\sqrt{n+1})_\gamma\langle n+1|a$$

$$_\gamma\langle n|a^\dagger = (\sqrt{n})_\gamma\langle n-1|a$$

The annihilation operator applied to the left creates a photon while the creation operator annihilates a photon when applied to the left.

$$_e\langle 1|_\gamma\langle 0|(\vec{p}\cdot\hat{\varepsilon})a = \hbar(\vec{q}\cdot\hat{\varepsilon})_e\langle 1|_\gamma\langle 1|$$
$$_e\langle 1|_\gamma\langle 0|(\vec{p}\cdot\hat{\varepsilon})a^\dagger = 0$$

$$M_{if} = \frac{e}{m}\sqrt{\frac{\hbar}{2\epsilon_0 V\omega}}\left[\hbar(\vec{q}\cdot\hat{\varepsilon})_e\langle 1|_\gamma\langle 1|e^{i\vec{k}\cdot\vec{r}}|1\rangle_\gamma|0\rangle_e + 0\right]$$
$$= \frac{e\hbar}{m}\sqrt{\frac{\hbar}{2\epsilon_0 V\omega}}(\vec{q}\cdot\hat{\varepsilon})_e\langle 1|e^{i\vec{k}\cdot\vec{r}}|0\rangle_e$$

Free electron approximation

$$_e\langle 1|\vec{p} = (\hbar\vec{q})_e\langle 1|$$

The free electron state is an eigenfunction of the electron momentum operator

$$_\gamma\langle n|a = (\sqrt{n+1})_\gamma\langle n+1|a$$

$$_\gamma\langle n|a^\dagger = (\sqrt{n})_\gamma\langle n-1|a$$

The annihilation operator applied to the left creates a photon while the creation operator annihilates a photon when applied to the left.

$$_e\langle 1|_\gamma\langle 0|(\vec{p}\cdot\hat{\varepsilon})a = \hbar(\vec{q}\cdot\hat{\varepsilon})_e\langle 1|_\gamma\langle 1|$$

$$_e\langle 1|_\gamma\langle 0|(\vec{p}\cdot\hat{\varepsilon})a^\dagger = 0$$

$$M_{if} = \frac{e}{m}\sqrt{\frac{\hbar}{2\epsilon_0 V\omega}}\left[\hbar(\vec{q}\cdot\hat{\varepsilon})_e\langle 1|_\gamma\langle 1|e^{i\vec{k}\cdot\vec{r}}|1\rangle_\gamma|0\rangle_e + 0\right]$$

$$= \frac{e\hbar}{m}\sqrt{\frac{\hbar}{2\epsilon_0 V\omega}}(\vec{q}\cdot\hat{\varepsilon})_e\langle 1|e^{i\vec{k}\cdot\vec{r}}|0\rangle_e = \frac{e\hbar}{m}\sqrt{\frac{\hbar}{2\epsilon_0 V\omega}}(\vec{q}\cdot\hat{\varepsilon})\int \psi_f^* e^{i\vec{k}\cdot\vec{r}}\psi_i d\vec{r}$$

Photoelectron integral

$$M_{if} = \frac{e\hbar}{m}\sqrt{\frac{\hbar}{2\epsilon_0 V\omega}}(\vec{q}\cdot\hat{\varepsilon})\int \psi_f^* e^{i\vec{k}\cdot\vec{r}}\psi_i d\vec{r}$$

Photoelectron integral

$$M_{if} = \frac{e\hbar}{m}\sqrt{\frac{\hbar}{2\epsilon_0 V\omega}}(\vec{q}\cdot\hat{\varepsilon})\int \psi_f^* e^{i\vec{k}\cdot\vec{r}}\psi_i d\vec{r} = \frac{e\hbar}{m}\sqrt{\frac{\hbar}{2\epsilon_0 V\omega}}(\vec{q}\cdot\hat{\varepsilon})\phi(\vec{Q})$$

Photoelectron integral

$$M_{if} = \frac{e\hbar}{m}\sqrt{\frac{\hbar}{2\epsilon_0 V\omega}}(\vec{q}\cdot\hat{\varepsilon})\int \psi_f^* e^{i\vec{k}\cdot\vec{r}}\psi_i d\vec{r} = \frac{e\hbar}{m}\sqrt{\frac{\hbar}{2\epsilon_0 V\omega}}(\vec{q}\cdot\hat{\varepsilon})\phi(\vec{Q})$$

The initial electron wavefunction is simply that of a $1s$ atomic state

Photoelectron integral

$$M_{if} = \frac{e\hbar}{m}\sqrt{\frac{\hbar}{2\epsilon_0 V\omega}}(\vec{q}\cdot\hat{\varepsilon})\int \psi_f^* e^{i\vec{k}\cdot\vec{r}}\psi_i d\vec{r} = \frac{e\hbar}{m}\sqrt{\frac{\hbar}{2\epsilon_0 V\omega}}(\vec{q}\cdot\hat{\varepsilon})\phi(\vec{Q})$$

$\psi_i = \psi_{1s}(\vec{r})$

The initial electron wavefunction is simply that of a $1s$ atomic state

Photoelectron integral

$$M_{if} = \frac{e\hbar}{m}\sqrt{\frac{\hbar}{2\epsilon_0 V\omega}}(\vec{q}\cdot\hat{\varepsilon})\int \psi_f^* e^{i\vec{k}\cdot\vec{r}}\psi_i d\vec{r} = \frac{e\hbar}{m}\sqrt{\frac{\hbar}{2\epsilon_0 V\omega}}(\vec{q}\cdot\hat{\varepsilon})\phi(\vec{Q})$$

$\psi_i = \psi_{1s}(\vec{r})$

The initial electron wavefunction is simply that of a $1s$ atomic state while the final state is approximated as a plane wave

Photoelectron integral

$$M_{if} = \frac{e\hbar}{m}\sqrt{\frac{\hbar}{2\epsilon_0 V\omega}}(\vec{q}\cdot\hat{\varepsilon})\int \psi_f^* e^{i\vec{k}\cdot\vec{r}}\psi_i d\vec{r} = \frac{e\hbar}{m}\sqrt{\frac{\hbar}{2\epsilon_0 V\omega}}(\vec{q}\cdot\hat{\varepsilon})\phi(\vec{Q})$$

$$\psi_i = \psi_{1s}(\vec{r}) \qquad \psi_f = \sqrt{\frac{1}{V}}e^{i\vec{q}\cdot\vec{r}}$$

The initial electron wavefunction is simply that of a $1s$ atomic state while the final state is approximated as a plane wave

Photoelectron integral

$$M_{if} = \frac{e\hbar}{m}\sqrt{\frac{\hbar}{2\epsilon_0 V\omega}}(\vec{q}\cdot\hat{\varepsilon})\int \psi_f^* e^{i\vec{k}\cdot\vec{r}}\psi_i d\vec{r} = \frac{e\hbar}{m}\sqrt{\frac{\hbar}{2\epsilon_0 V\omega}}(\vec{q}\cdot\hat{\varepsilon})\phi(\vec{Q})$$

$$\psi_i = \psi_{1s}(\vec{r}) \qquad \psi_f = \sqrt{\frac{1}{V}}e^{i\vec{q}\cdot\vec{r}}$$

The initial electron wavefunction is simply that of a $1s$ atomic state while the final state is approximated as a plane wave

The integral thus becomes

Photoelectron integral

$$M_{if} = \frac{e\hbar}{m}\sqrt{\frac{\hbar}{2\epsilon_0 V\omega}}(\vec{q}\cdot\hat{\varepsilon})\int \psi_f^* e^{i\vec{k}\cdot\vec{r}}\psi_i d\vec{r} = \frac{e\hbar}{m}\sqrt{\frac{\hbar}{2\epsilon_0 V\omega}}(\vec{q}\cdot\hat{\varepsilon})\phi(\vec{Q})$$

$$\psi_i = \psi_{1s}(\vec{r}) \qquad \psi_f = \sqrt{\frac{1}{V}}e^{i\vec{q}\cdot\vec{r}}$$

$$\phi(\vec{Q}) = \sqrt{\frac{1}{V}}\int e^{-i\vec{q}\cdot\vec{r}}e^{i\vec{k}\cdot\vec{r}}\psi_{1s}(\vec{r})d\vec{r}$$

The initial electron wavefunction is simply that of a $1s$ atomic state while the final state is approximated as a plane wave

The integral thus becomes

Photoelectron integral

$$M_{if} = \frac{e\hbar}{m}\sqrt{\frac{\hbar}{2\epsilon_0 V\omega}}(\vec{q}\cdot\hat{\varepsilon})\int \psi_f^* e^{i\vec{k}\cdot\vec{r}}\psi_i d\vec{r} = \frac{e\hbar}{m}\sqrt{\frac{\hbar}{2\epsilon_0 V\omega}}(\vec{q}\cdot\hat{\varepsilon})\phi(\vec{Q})$$

$$\psi_i = \psi_{1s}(\vec{r}) \qquad \psi_f = \sqrt{\frac{1}{V}}e^{i\vec{q}\cdot\vec{r}}$$

$$\phi(\vec{Q}) = \sqrt{\frac{1}{V}}\int e^{-i\vec{q}\cdot\vec{r}}e^{i\vec{k}\cdot\vec{r}}\psi_{1s}(\vec{r})d\vec{r}$$

$$= \sqrt{\frac{1}{V}}\int \psi_{1s}(\vec{r})e^{i(\vec{k}-\vec{q})\cdot\vec{r}}d\vec{r}$$

The initial electron wavefunction is simply that of a $1s$ atomic state while the final state is approximated as a plane wave

The integral thus becomes

Photoelectron integral

$$M_{if} = \frac{e\hbar}{m}\sqrt{\frac{\hbar}{2\epsilon_0 V\omega}}(\vec{q}\cdot\hat{\varepsilon})\int \psi_f^* e^{i\vec{k}\cdot\vec{r}}\psi_i d\vec{r} = \frac{e\hbar}{m}\sqrt{\frac{\hbar}{2\epsilon_0 V\omega}}(\vec{q}\cdot\hat{\varepsilon})\phi(\vec{Q})$$

$$\psi_i = \psi_{1s}(\vec{r}) \qquad \psi_f = \sqrt{\frac{1}{V}}e^{i\vec{q}\cdot\vec{r}}$$

$$\begin{aligned}\phi(\vec{Q}) &= \sqrt{\frac{1}{V}}\int e^{-i\vec{q}\cdot\vec{r}}e^{i\vec{k}\cdot\vec{r}}\psi_{1s}(\vec{r})d\vec{r} \\ &= \sqrt{\frac{1}{V}}\int \psi_{1s}(\vec{r})e^{i(\vec{k}-\vec{q})\cdot\vec{r}}d\vec{r} \\ &= \sqrt{\frac{1}{V}}\int \psi_{1s}(\vec{r})e^{i\vec{Q}\cdot\vec{r}}d\vec{r}\end{aligned}$$

The initial electron wavefunction is simply that of a 1s atomic state while the final state is approximated as a plane wave

The integral thus becomes

Photoelectron integral

$$M_{if} = \frac{e\hbar}{m}\sqrt{\frac{\hbar}{2\epsilon_0 V\omega}}(\vec{q}\cdot\hat{\varepsilon})\int \psi_f^* e^{i\vec{k}\cdot\vec{r}}\psi_i d\vec{r} = \frac{e\hbar}{m}\sqrt{\frac{\hbar}{2\epsilon_0 V\omega}}(\vec{q}\cdot\hat{\varepsilon})\phi(\vec{Q})$$

$$\psi_i = \psi_{1s}(\vec{r}) \qquad \psi_f = \sqrt{\frac{1}{V}}e^{i\vec{q}\cdot\vec{r}}$$

$$\begin{aligned}\phi(\vec{Q}) &= \sqrt{\frac{1}{V}}\int e^{-i\vec{q}\cdot\vec{r}}e^{i\vec{k}\cdot\vec{r}}\psi_{1s}(\vec{r})d\vec{r} \\ &= \sqrt{\frac{1}{V}}\int \psi_{1s}(\vec{r})e^{i(\vec{k}-\vec{q})\cdot\vec{r}}d\vec{r} \\ &= \sqrt{\frac{1}{V}}\int \psi_{1s}(\vec{r})e^{i\vec{Q}\cdot\vec{r}}d\vec{r}\end{aligned}$$

The initial electron wavefunction is simply that of a $1s$ atomic state while the final state is approximated as a plane wave

The integral thus becomes

which is the Fourier transform of the initial state $1s$ electron wave function

Photoelectron cross-section

the overall matrix element squared for a particular photoelectron final direction (φ, θ) is

Photoelectron cross-section

the overall matrix element squared for a particular photoelectron final direction (φ, θ) is

$$|M_{if}|^2 = \left(\frac{e\hbar}{m}\right)^2 \frac{\hbar}{2\epsilon_0 V^2 \omega}(q^2 \sin^2\theta \cos^2\varphi)\phi^2(\vec{Q})$$

Photoelectron cross-section

the overall matrix element squared for a particular photoelectron final direction (φ, θ) is

$$|M_{if}|^2 = \left(\frac{e\hbar}{m}\right)^2 \frac{\hbar}{2\epsilon_0 V^2 \omega}(q^2 \sin^2\theta \cos^2\varphi)\phi^2(\vec{Q})$$

and the final cross-section per K electron can now be computed as

Photoelectron cross-section

the overall matrix element squared for a particular photoelectron final direction (φ, θ) is

$$|M_{if}|^2 = \left(\frac{e\hbar}{m}\right)^2 \frac{\hbar}{2\epsilon_0 V^2 \omega}(q^2 \sin^2\theta \cos^2\varphi)\phi^2(\vec{Q})$$

and the final cross-section per K electron can now be computed as

$$\sigma_a = \frac{2\pi}{\hbar c}\frac{V^2}{4\pi^3}\left(\frac{e\hbar}{m}\right)^2 \frac{\hbar}{2\epsilon_0 V^2 \omega} I_3$$

Photoelectron cross-section

the overall matrix element squared for a particular photoelectron final direction (φ, θ) is

$$|M_{if}|^2 = \left(\frac{e\hbar}{m}\right)^2 \frac{\hbar}{2\epsilon_0 V^2 \omega}(q^2 \sin^2\theta \cos^2\varphi)\phi^2(\vec{Q})$$

and the final cross-section per K electron can now be computed as

$$\sigma_a = \frac{2\pi}{\hbar c}\frac{V^2}{4\pi^3}\left(\frac{e\hbar}{m}\right)^2 \frac{\hbar}{2\epsilon_0 V^2 \omega} I_3 = \left(\frac{e\hbar}{m}\right)^2 \frac{1}{4\pi^2 \epsilon_0 c\omega} I_3$$

Photoelectron cross-section

the overall matrix element squared for a particular photoelectron final direction (φ, θ) is

$$|M_{if}|^2 = \left(\frac{e\hbar}{m}\right)^2 \frac{\hbar}{2\epsilon_0 V^2 \omega}(q^2 \sin^2\theta \cos^2\varphi)\phi^2(\vec{Q})$$

and the final cross-section per K electron can now be computed as

$$\sigma_a = \frac{2\pi}{\hbar c}\frac{V^2}{4\pi^3}\left(\frac{e\hbar}{m}\right)^2 \frac{\hbar}{2\epsilon_0 V^2 \omega} I_3 = \left(\frac{e\hbar}{m}\right)^2 \frac{1}{4\pi^2 \epsilon_0 c\omega} I_3$$

where the integral I_3 is given by

Photoelectron cross-section

the overall matrix element squared for a particular photoelectron final direction (φ, θ) is

$$|M_{if}|^2 = \left(\frac{e\hbar}{m}\right)^2 \frac{\hbar}{2\epsilon_0 V^2 \omega}(q^2 \sin^2\theta \cos^2\varphi)\phi^2(\vec{Q})$$

and the final cross-section per K electron can now be computed as

$$\sigma_a = \frac{2\pi}{\hbar c}\frac{V^2}{4\pi^3}\left(\frac{e\hbar}{m}\right)^2 \frac{\hbar}{2\epsilon_0 V^2 \omega} I_3 = \left(\frac{e\hbar}{m}\right)^2 \frac{1}{4\pi^2 \epsilon_0 c\omega} I_3$$

where the integral I_3 is given by

$$I_3 = \int \phi^2(\vec{Q}) q^2 \sin^2\theta \cos^2\varphi \delta(\mathcal{E}_f - \mathcal{E}_i) q^2 \sin\theta dq d\theta d\phi$$

Calculated cross section

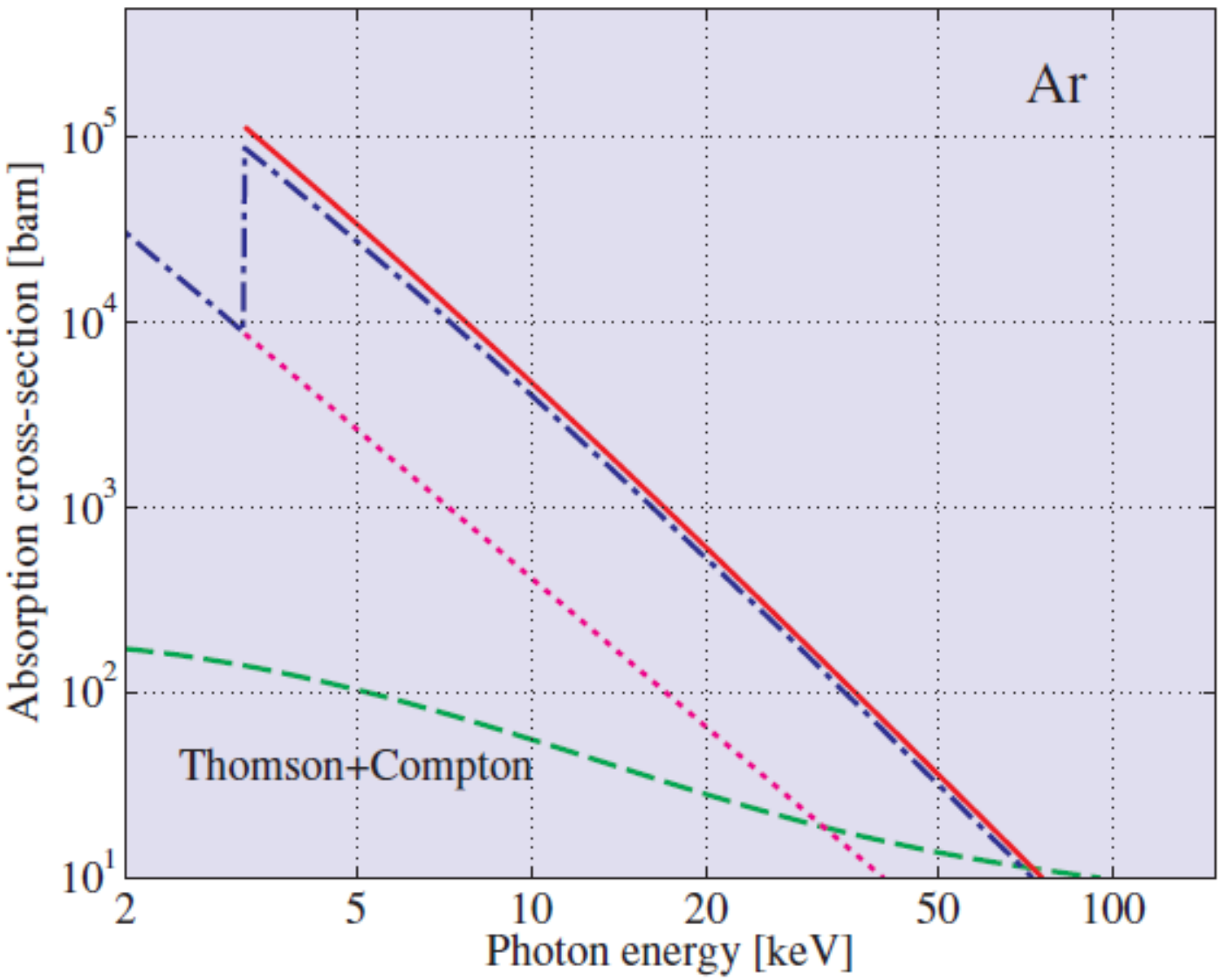

Calculated cross section

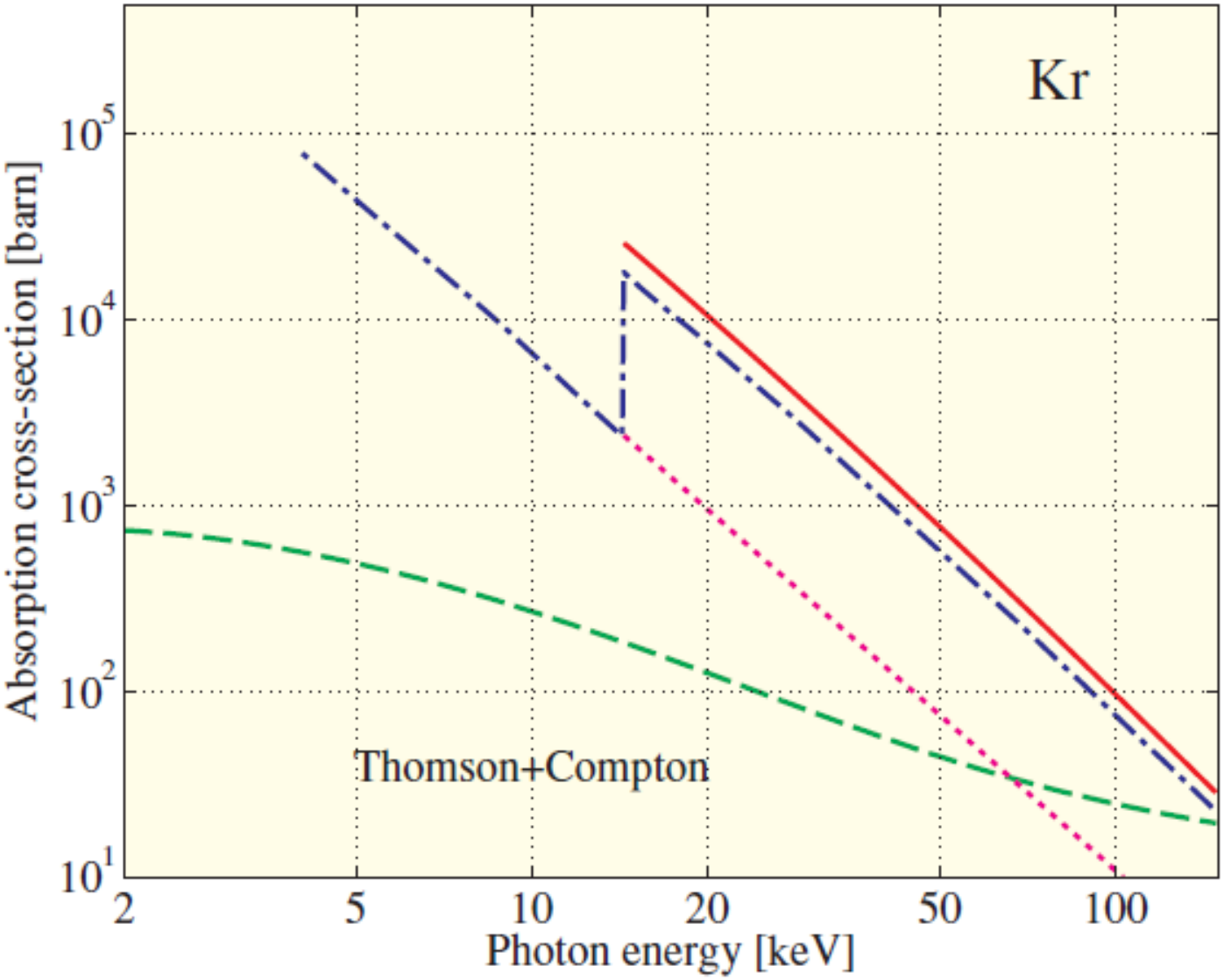

Calculated cross section